( ) Preliminary Specifications
(V) Final Specifications

Module	10.1 Inch Color TFT-LCD
Model Name	G101EVN01.0

Customer	Date	Approved by	Date
		Debbie Chiu	2013/05/14
Checked & Approved by		**Prepared by**	
		ShengHsun Lin	2013/05/14
Note: This Specification is subject to change without notice.		General Display Business Division / AU Optronics corporation	

Contents

1. Operating Precautions 3
2. General Description 5
2.1 Display Characteristics 5
2.2 Optical Characteristics 6
3. Functional Block Diagram 9
4. Absolute Maximum Ratings 10
4.1 Absolute Ratings of TFT LCD Module 10
4.2 Absolute Ratings of Environment 10
5. Electrical Characteristics 11
5.1 TFT LCD Module 11
5.2 Backlight Unit 13
6. Signal Characteristic 14
6.1 Pixel Format Image 14
6.3 Signal Description 15
6.4 The Input Data Format 17
6.5 Interface Timing 18
6.6 Power ON/OFF Sequence 19
7. Reliability Test Criteria 20
8. Mechanical Characteristics 21
8.1 LCM Outline Dimension (Front View) 21
8.2 LCM Outline Dimension (Rear View) 22
9. Label and Packaging 23
9.1 Shipping Label (on the rear side of TFT-LCD display) 23
9.2 Carton Package 23
10 Safety 24
10.1 Sharp Edge Requirements 24
10.2 Materials 24
10.3 Capacitors 24
10.4 National Test Lab Requirement 24

Record of Revision

<table>
<tr><th>Version and Date</th><th>Page</th><th>Old description</th><th>New Description</th></tr>
<tr><td>0.0 Mar, 07, 2013</td><td>All</td><td>First draft specification</td><td>-</td></tr>
<tr><td rowspan="7">1.0 May, 14, 2013</td><td>--</td><td>Final Specification</td><td></td></tr>
<tr><td>5</td><td>Typical Power Consumption</td><td>Correct the writing mistake.</td></tr>
<tr><td>13</td><td></td><td>Add LED Life time 25K (typical)</td></tr>
<tr><td>5
22
23</td><td></td><td>Add air tape thickness in module 5.54mm (max.) and update in 2D drawing</td></tr>
<tr><td>11</td><td>
<table>
<tr><th>Symbol</th><th>Parameter</th><th>Min</th><th>Typ</th><th>Max</th><th>Units</th></tr>
<tr><td>VDD</td><td>Logic/LCD Drive Voltage</td><td>3.0</td><td>3.3</td><td>3.6</td><td>[Volt]</td></tr>
<tr><td>IDD</td><td>VDD Current</td><td>--</td><td>--</td><td>245</td><td>[mA]</td></tr>
<tr><td>Irush</td><td>LCD Inrush Current</td><td>--</td><td>--</td><td>2000</td><td>[A]</td></tr>
<tr><td>PDD</td><td>VDD Power</td><td>--</td><td>--</td><td>0.8</td><td>[Watt]</td></tr>
</table>
</td><td>Update Power Specifiation table
<table>
<tr><th>Symbol</th><th>Parameter</th><th>Min</th><th>Typ</th><th>Max</th><th>Units</th></tr>
<tr><td>VDD</td><td>Logic/LCD Drive Voltage</td><td>3.0</td><td>3.3</td><td>3.6</td><td>[Volt]</td></tr>
<tr><td>IDD</td><td>VDD Current</td><td>--</td><td>170</td><td>245</td><td>[mA]</td></tr>
<tr><td>Irush</td><td>LCD Inrush Current</td><td>--</td><td>--</td><td>1500</td><td>[mA]</td></tr>
<tr><td>PDD</td><td>VDD Power</td><td>--</td><td>0.56</td><td>0.8</td><td>[Watt]</td></tr>
</table>
</td></tr>
<tr><td>13</td><td>Note 2: VCC, I_{VCC}, P_{VCC} are defined for LED backlight.</td><td>Note 2: VLED, I_{VLED}, P_{VLED} are defined for LED backlight.
Add I_{VLED}, P_{VLED} range is under VLED =12V condition.</td></tr>
<tr><td>15</td><td>
<table>
<tr><th>Pin No.</th><th>Symbol</th><th>Function</th></tr>
<tr><td>1</td><td>NC</td><td>No Connection (Reserve)</td></tr>
<tr><td>2</td><td>AVDD</td><td>Power Supply +3.3V</td></tr>
<tr><td>3</td><td>AVDD</td><td>Power Supply +3.3V</td></tr>
</table>
</td><td>Correct the name of VDD.
<table>
<tr><th>Pin No.</th><th>Symbol</th><th>Function</th></tr>
<tr><td>1</td><td>NC</td><td>No Connection (Reserve)</td></tr>
<tr><td>2</td><td>VDD</td><td>Power Supply +3.3V</td></tr>
<tr><td>3</td><td>VDD</td><td>Power Supply +3.3V</td></tr>
</table>
</td></tr>
<tr><td>24</td><td>Outside dimension of carton: 374mm(L)* 320mm(W)*241mm(H)
Pallet size：1140 mm * 980 mm * 135mm</td><td>Update Packing Cartion Condition
Outside dimension of carton: 484(L)*328(W)*257(H)mm
Pallet size：1450mm*980mm*138mm</td></tr>
</table>

1. Operating Precautions

1) Since front polarizer is easily damaged, please be cautious and not to scratch it.
2) Be sure to turn off power supply when inserting or disconnecting from input connector.
3) Wipe off water drop immediately. Long contact with water may cause discoloration or spots.
4) When the panel surface is soiled, wipe it with absorbent cotton or soft cloth.
5) Since the panel is made of glass, it may be broken or cracked if dropped or bumped on hard surface.
6) To avoid ESD (Electro Static Discharde) damage, be sure to ground yourself before handling TFT-LCD Module.
7) Do not open nor modify the module assembly.
8) Do not press the reflector sheet at the back of the module to any direction.
9) In case if a module has to be put back into the packing container slot after it was taken out from the container, do not press the center of the LED light bar edge. Instead, press at the far ends of the LED light bar edge softly. Otherwise the TFT Module may be damaged.
10) At the insertion or removal of the Signal Interface Connector, be sure not to rotate nor tilt the Interface Connector of the TFT Module.
11) TFT-LCD Module is not allowed to be twisted & bent even force is added on module in a very short time. Please design your display product well to avoid external force applying to module by end-user directly.
12) Small amount of materials having no flammability grade is used in the LCD module. The LCD module should be supplied by power complied with requirements of Limited Power Source (IEC60950 or UL1950), or be applied exemption.
13) Severe temperature condition may result in different luminance, response time and lamp ignition voltage.
14) Continuous operating TFT-LCD display under low temperature environment may accelerate lamp exhaustion and reduce luminance dramatically.
15) The data on this specification sheet is applicable when LCD module is placed in landscape position.
16) Continuous displaying fixed pattern may induce image sticking. It's recommended to use screen saver or shuffle content periodically if fixed pattern is displayed on the screen.

www.boardtv.com

2. General Description

G101EVN01.0 is a Color Active Matrix Liquid Crystal Display composed of a TFT LCD panel, a driver circuit, and LED backlight system. The screen format is intended to support the 16:10 WXGA, 1280(H) x800(V) screen and 262k colors (RGB 6-bits data driver) with LED backlight driving circuit. All input signals are LVDS interface compatible.

G101EVN01.0 is designed for a display unit of notebook style personal computer and industrial machine.

2.1 Display Characteristics

The following items are characteristics summary on the table under 25 °C condition:

Items	Unit	Specifications
Screen Diagonal	[inch]	10.1"
Active Area	[mm]	216.96(H) x 135.6(V)
Pixels H x V		1280 x 3(RGB) x 800
Pixel Pitch	[mm]	0.1695 X 0.1695
Pixel Arrangement		R.G.B. Vertical Stripe
Display Mode		MVA, Normally Black
Nominal Input Voltage VDD	[Volt]	3.3 (Typical)
Power Consumption	[Watt]	3.4 max. (Include Logic and Blu power)
Weight	[Grams]	187g max.
Physical Size	[mm]	229.46±0.5(H) x 149.2±0.5(V) x 4.96(max.)(T) (without air tape) /5.54(max.)(T) (with air tape)
Electrical Interface		LVDS
Surface Treatment		Anti-Reflection ≦1.5%, Hardness 3H Anti- Static
Support Color		262K colors (RGB 6-bit)
Temperature Range Operating Storage (Non-Operating)	 [°C] [°C]	 -20 to +60 -30 to +70
RoHS Compliance		RoHS Compliance

2.2 Optical Characteristics

The optical characteristics are measured under stable conditions at 25 °C (Room Temperature):

Item	Unit	Conditions	Min.	Typ.	Max.	Note
White Luminance	[cd/m2]	I_{LED}= 25mA (5p average)	255	300		
Uniformity	%	5 points	80%			
Contrast Ratio			1000	1300	-	
Response Time	[msec]	Rising				
	[msec]	Falling				
	[msec]	Rising + Falling	---	25	35	
Viewing Angle	[degree]	Horizontal (Right) CR = 10	80	85	---	
	[degree]	(Left)	80	85	---	
	[degree]	Vertical (Upper) CR = 10	80	85	---	
	[degree]	(Lower)	80	85	---	
Color / Chromaticity Coordinates (CIE 1931)		Red x	0.549	0.579	0.609	
		Red y	0.308	0.338	0.368	
		Green x	0.295	0.325	0.355	
		Green y	0.53	0.56	0.59	
		Blue x	0.122	0.152	0.182	
		Blue y	0.095	0.125	0.155	
		White x	0.283	0.313	0.343	
		White y	0.299	0.329	0.359	
Color Gamut	%		-	45	-	

Note 1: Measurement method

Equipment Pattern Generator, Power Supply, Digital Voltmeter, Luminance meter (SR_3 or equivalent)

Aperture Field angle 2° with 50cm measuring distance

Test Point Follow Note 2 position

Environment *< 1 lux*

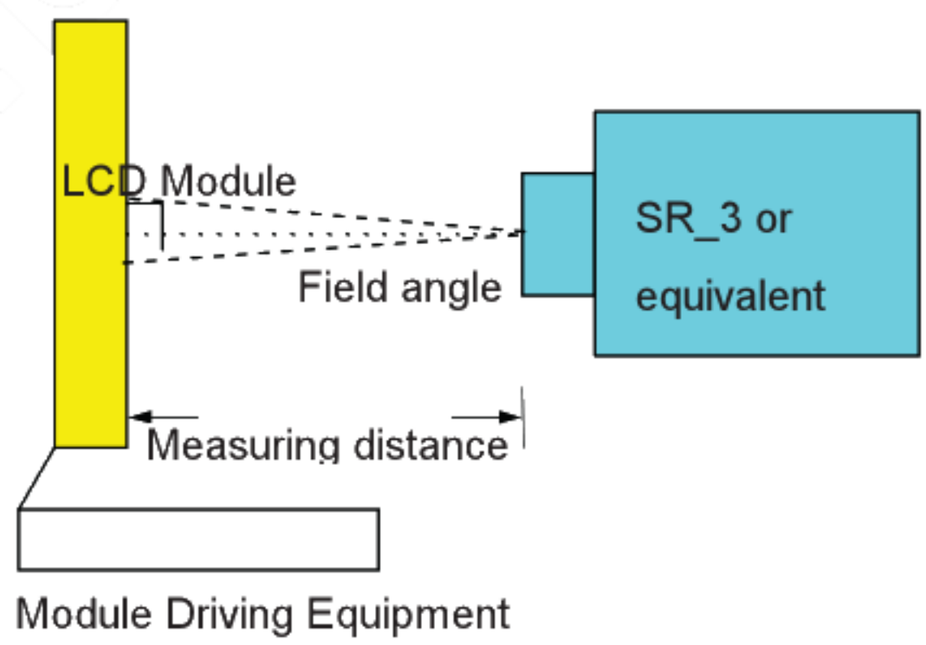

Note 2: Definition of 5 points position (Display active area: 216.96(H) x 135.6(V))

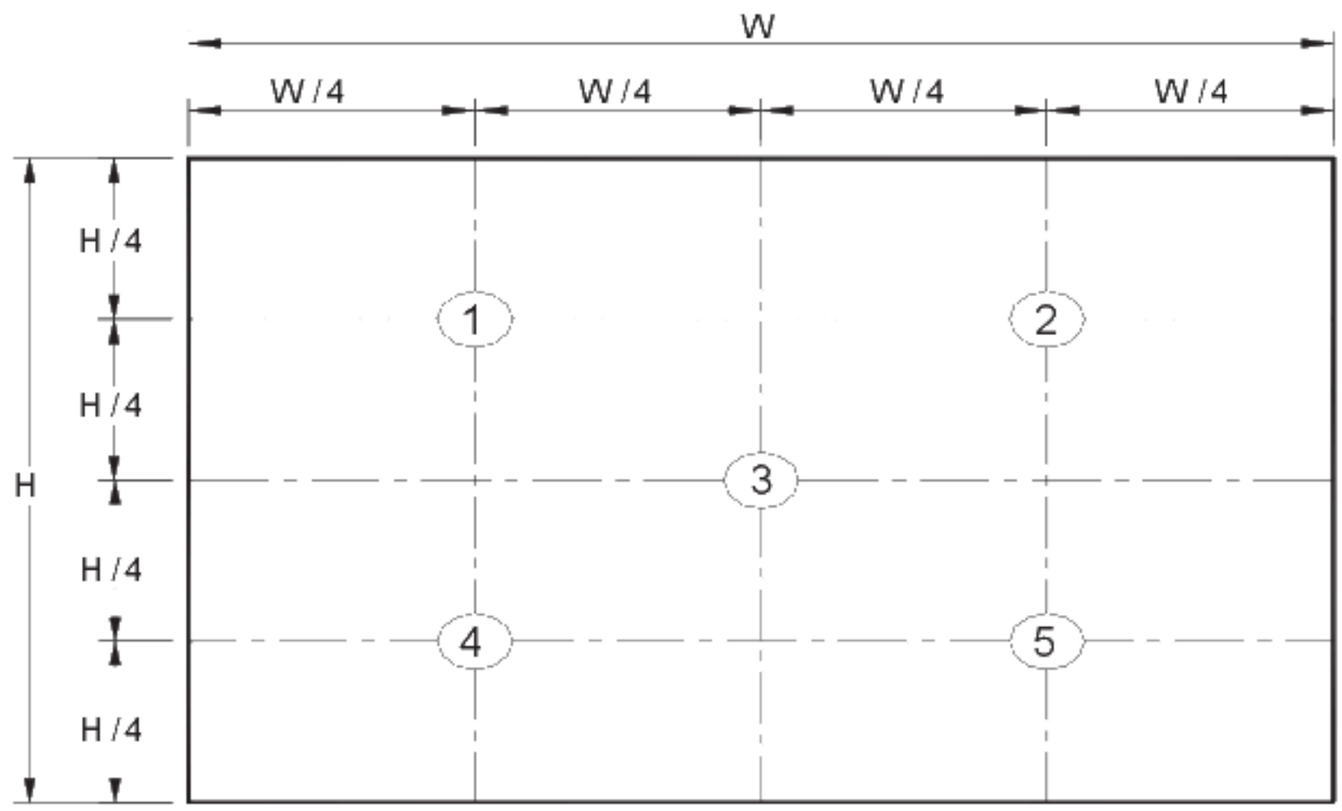

Note 3: The luminance uniformity of 5 points is defined by dividing the minimum luminance values by the maximum test point luminance

$$\delta_{W9} = \frac{\text{Minimum Brightness of five points}}{\text{Maximum Brightness of five points}}$$

Note 4: Definition of contrast ratio (CR):

$$\text{Contrast ratio (CR)} = \frac{\text{Brightness on the “White” state}}{\text{Brightness on the “Black” state}}$$

Note 5: Definition of response time:

The output signals of photo detector are measured when the input signals are changed from “White” to “Black” (falling time) and from “Black” to “White” (rising time), respectively. The response time interval is between 10% and 90% of amplitudes. Please refer to the figure as below.

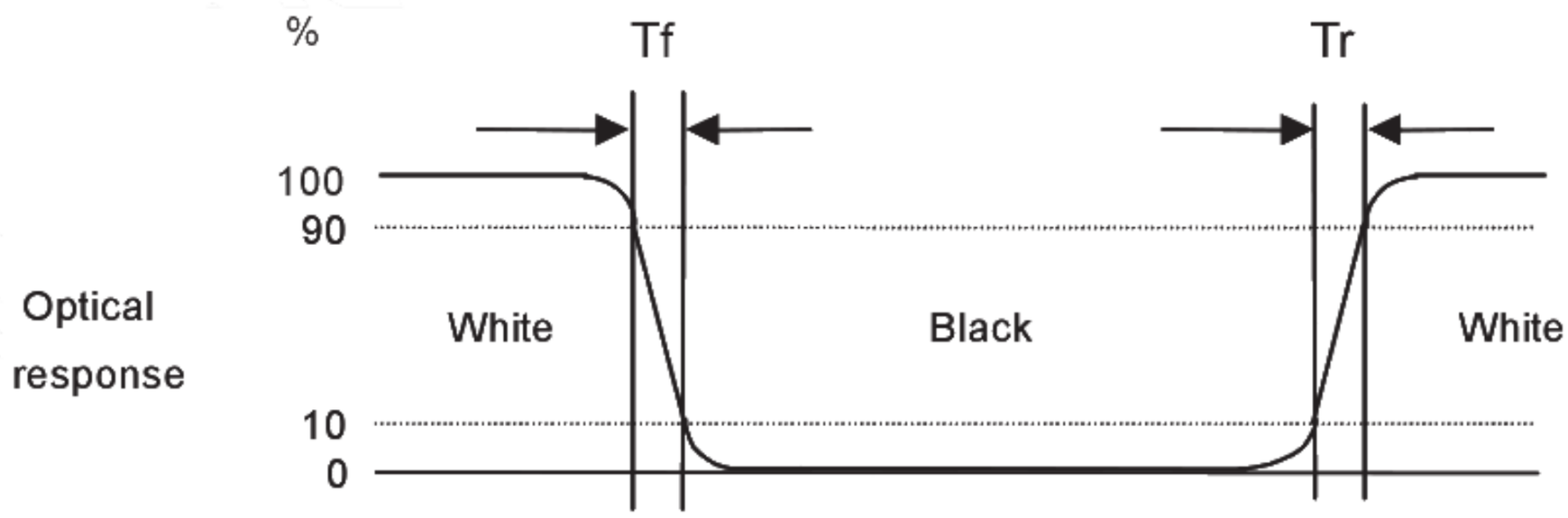

Note 6: Definition of viewing angle

Viewing angle is the measurement of contrast ratio ≧10, at the screen center, over a 180° horizontal and 180° vertical range (off-normal viewing angles). The 180° viewing angle range is broken down as below: 90° (θ) horizontal left and right, and 90° (Φ) vertical high (up) and low (down). The measurement direction is typically perpendicular to the display surface with the screen rotated to its center to develop the desired measurement viewing angle.

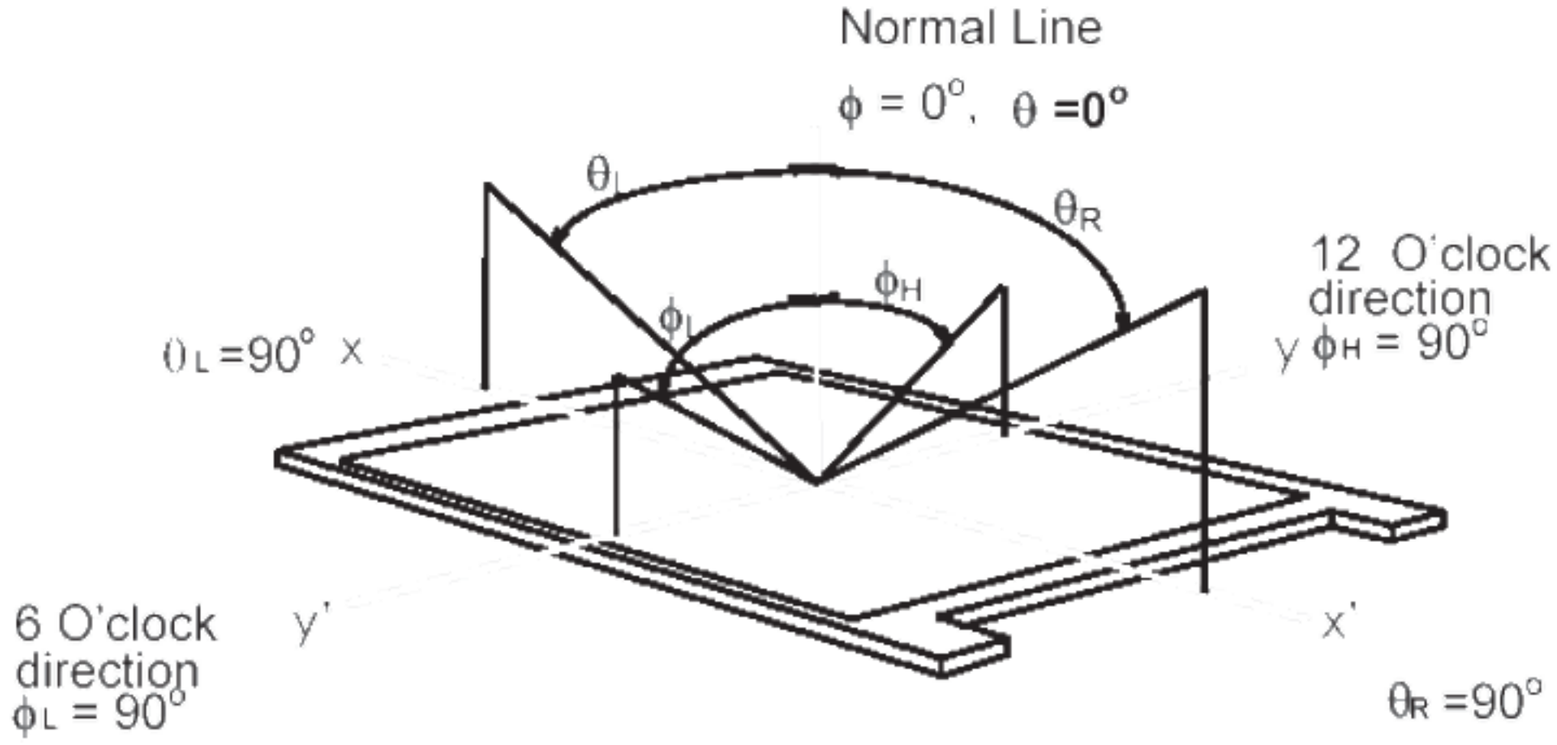

3. Functional Block Diagram

The following diagram shows the functional block of the 10.1 inch color TFT/LCD module:

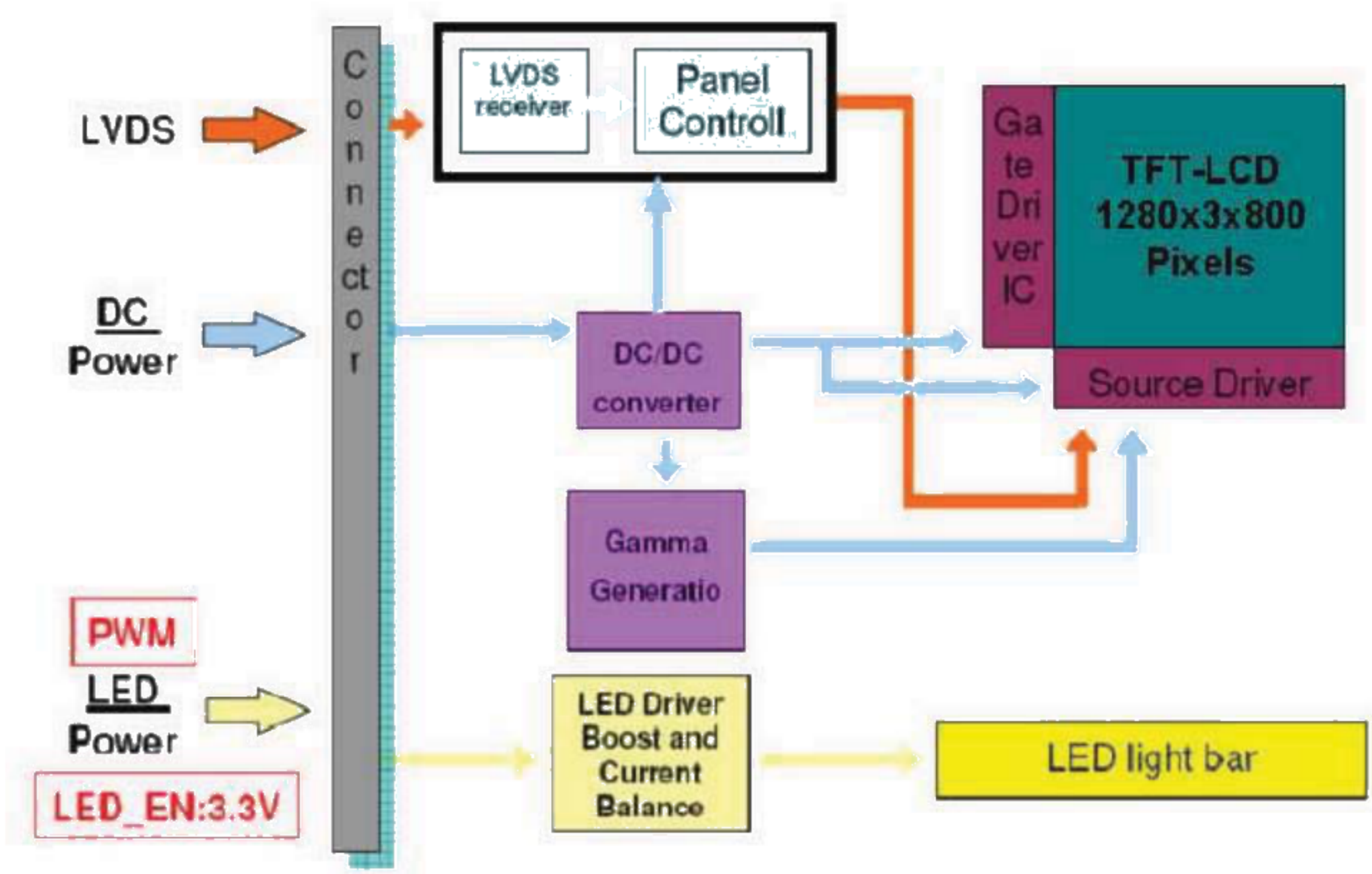

4. Absolute Maximum Ratings

4.1 Absolute Ratings of TFT LCD Module

Item	Symbol	Min	Max	Unit
Logic/LCD drive Voltage	Vin	-0.3	+4.0	[Volt]

4.2 Absolute Ratings of Environment

Item	Symbol	Min	Max	Unit
Operating Temperature	TOP	0	+60	[°C]
Operation Humidity	HOP	5	95	[%RH]
Storage Temperature	TST	-30	+70	[°C]
Storage Humidity	HST	5	95	[%RH]

Note 1: At Ta (25℃)

Note 2: Permanent damage to the device may occur if exceed maximum values

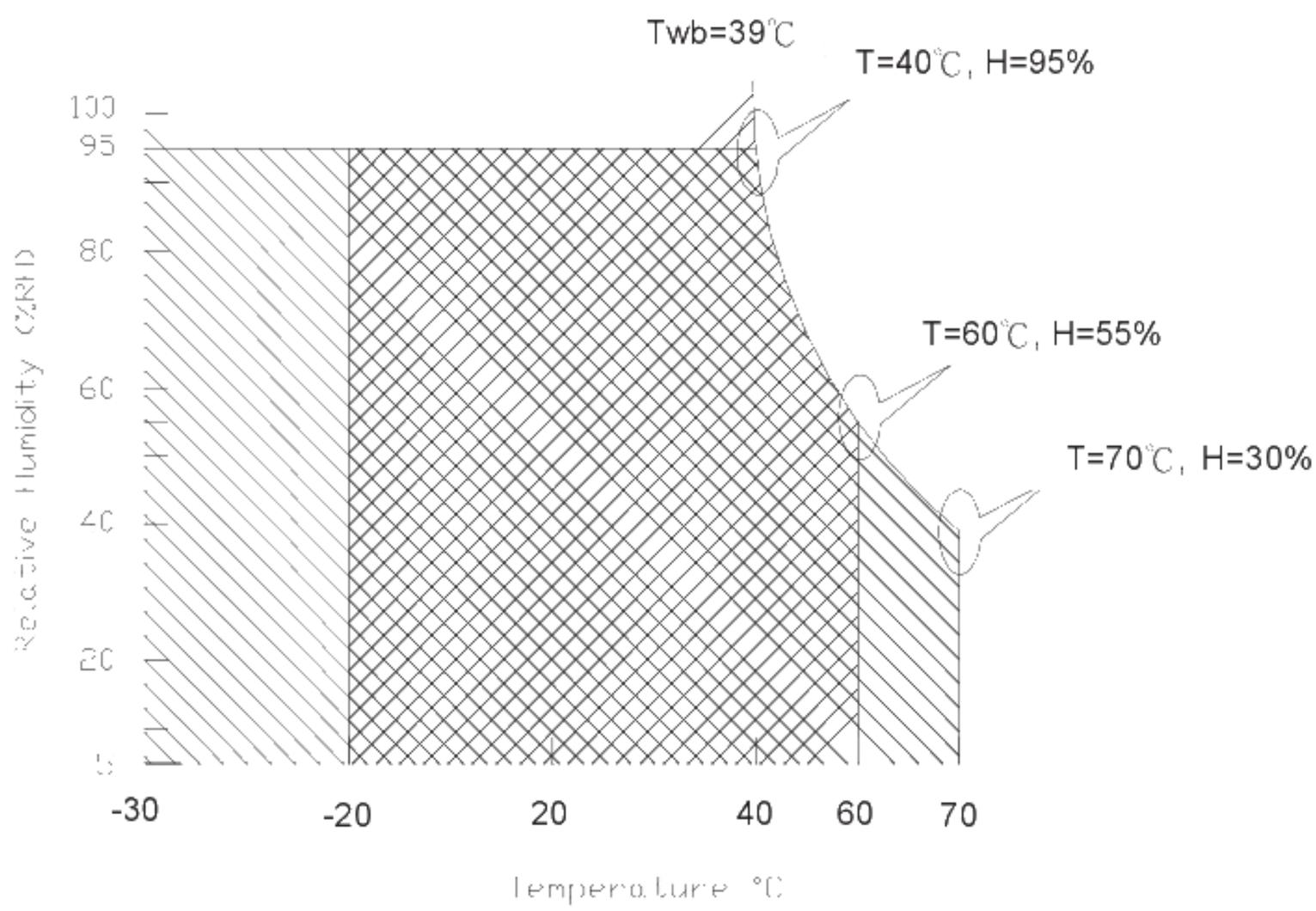

Operating Range Storage Range

5. Electrical Characteristics

5.1 TFT LCD Module

5.1.1 Power Specification

The power specification are measured under 25℃ and frame frenquency under 60Hz

Symbol	Parameter	Min	Typ	Max	Units	Remark
VDD	Logic/LCD Drive Voltage	3.0	3.3	3.6	[Volt]	
IDD	VDD Current	-	170	245	[mA]	All Black Pattern (VDD=3.3V, at 60Hz)
Irush	LCD Inrush Current	-	-	1500	[mA]	Note 1
PDD	VDD Power	-	0.56	0.8	[Watt]	All Black Pattern (VDD=3.3V, at 60Hz)
VDDrp	Allowable Logic/LCD Drive Ripple Voltage	-	-	100	[mV] p-p	All Black Pattern (VDD=3.3V, at 60Hz)

Note 1 : Maximum Measurement Condition : White Pattern at 3.3V driving voltage. ($P_{max}=V_{3.3} \times I_{white}$)

Note 2 : Measure Condition

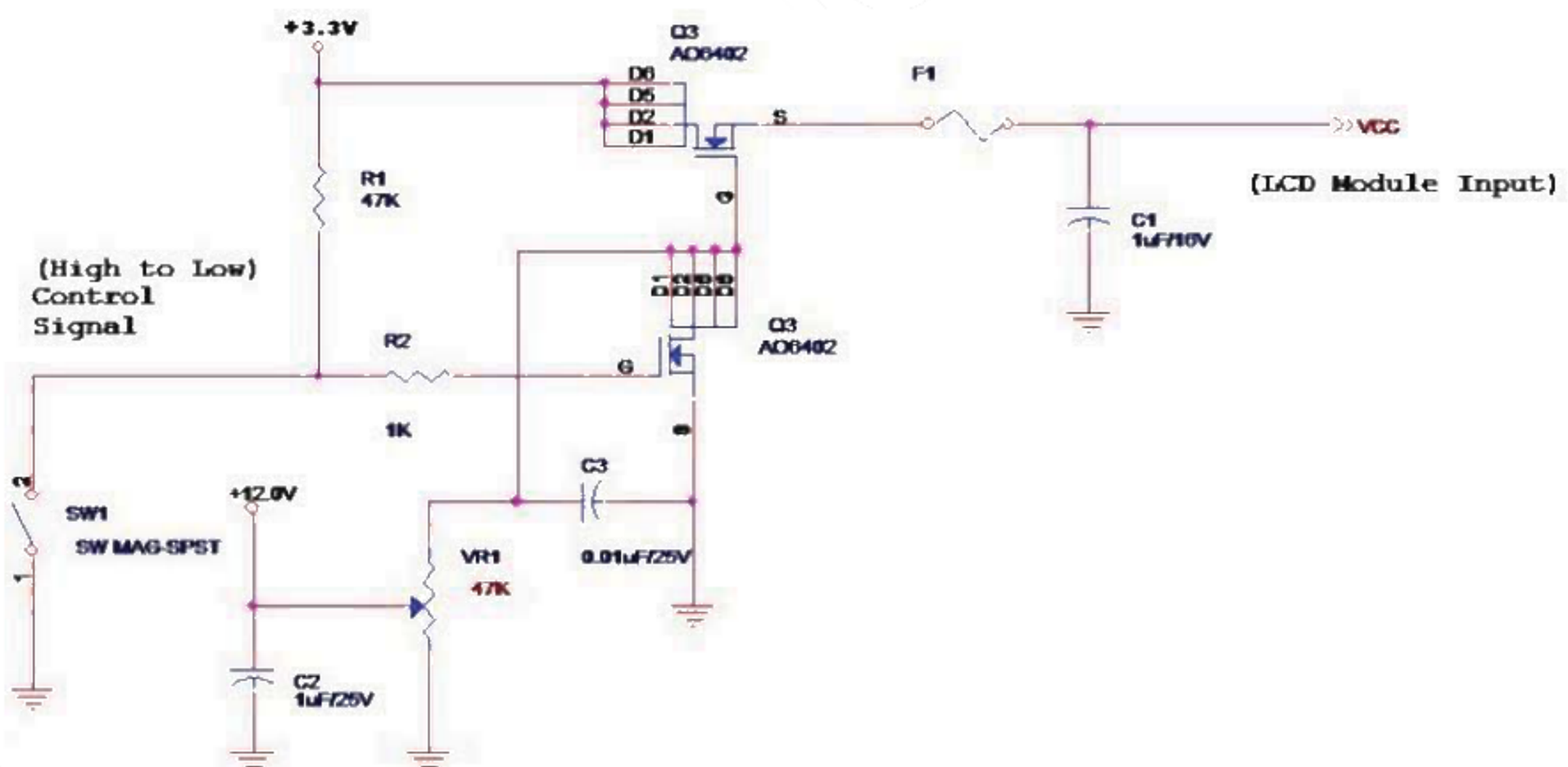

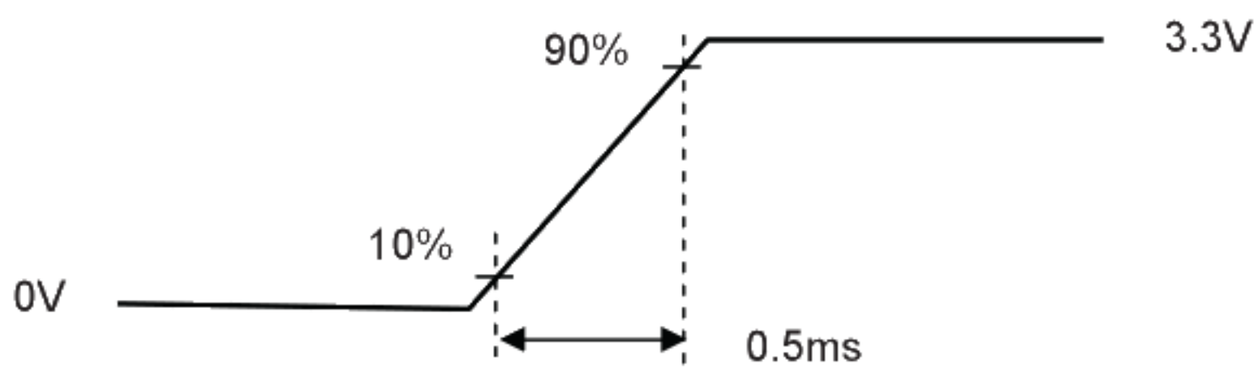

VDD rising time

5.1.2 Signal Electrical Characteristics

Input signals shall be low or Hi-Z state when VDD is off.

Signal electrical characteristics are as follows;

Symbol	Item	Min.	Typ.	Max.	Unit	Remark
VTH	Differential Input High Threshold	---		100	[mV]	VCM=1.2V
VTL	Differential Input Low Threshold	-100		----	[mV]	VCM=1.2V
| VID |	Input Differential Voltage	100		600	[mV]	
VICM	Differential Input Common Mode Voltage	1.125		1.375	[V]	VTH/VTL=+-100mV

Note: LVDS Signal Waveform.

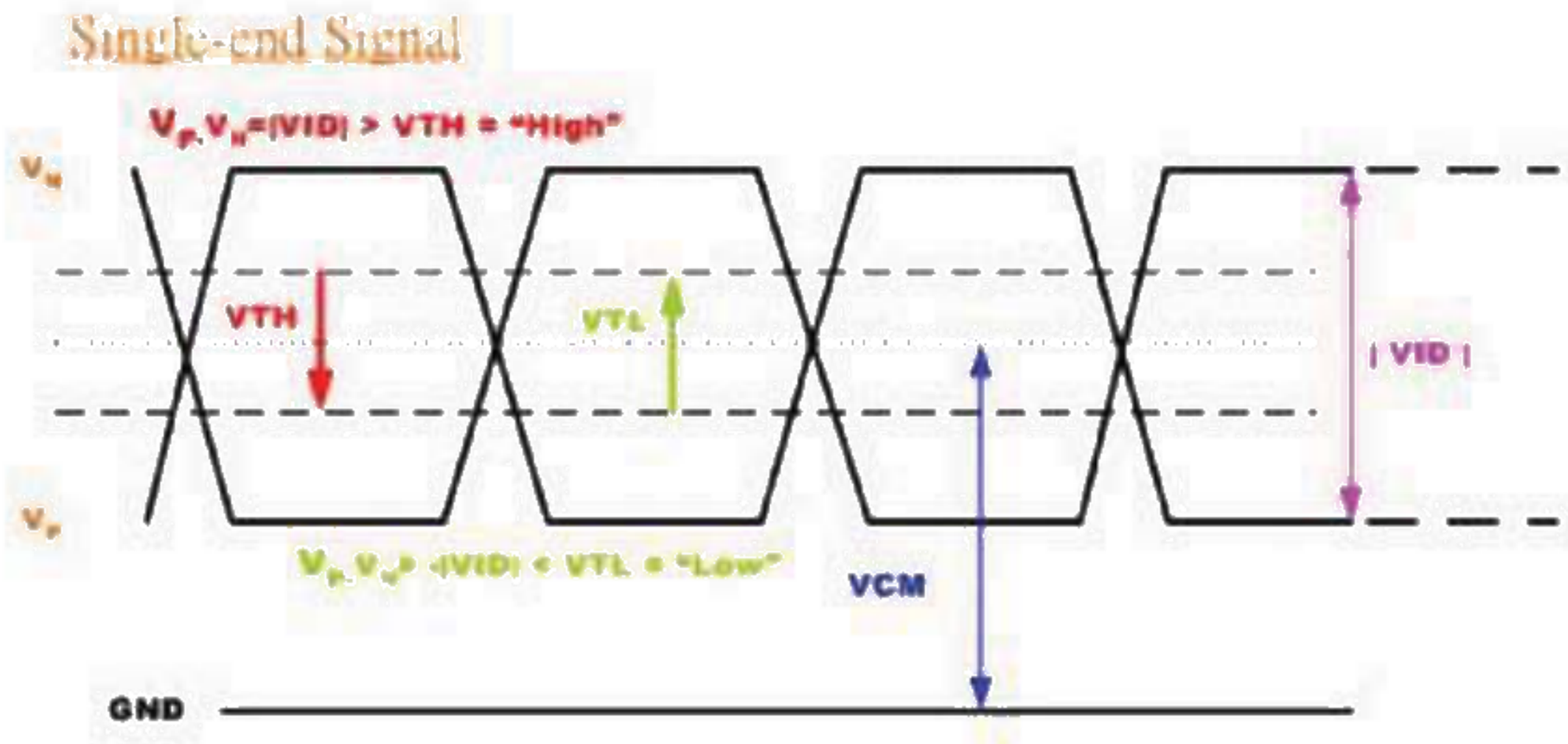

5.2 Backlight Unit

5.2.1 Parameter guideline for LED

Following characteristics are measured under a stable condition using an inverter at 25℃ (Room Temperature):

Symbol	Parameter	Min.	Typ.	Max.	Unit	Remark
VLED	Input Voltage	5.5	-	12	[Volt]	
I_{VLED}	Input Current	-	217	-	[mA]	100% Brightness (VLED = 12V)
P_{VLED}	Power Consumption	-	-	2.6	[Watt]	100% Brightness (VLED = 12V)
F_{PWM}	Dimming Frequency	200	-	20K	[Hz]	PWM Dimming
Dimming	Swing Voltage	2.5	-	5.5	[Volt]	
	Dimming duty cycle	5	-	100	%	
I_F	LED Forward Current	-	22	-	[mA]	Ta = 25°C
Operation Life		15,000	25,000	-	Hrs	(Ta=25℃), Note 2 I_F=19mA

Note 1: Ta means ambient temperature of TFT-LCD module.

Note 2: VLED, I_{VLED}, P_{VLED} are defined for LED backlight.(100% duty of PWM dimming)

Note 3: If G101EVN01.0 module is driven by high current or at high ambient temperature & humidity condition. The operating life will be reduced.

Note 4: Operating life means brightness goes down to 50% initial brightness. Minimum operating life time is estimated data.

6. Signal Characteristic

6.1 Pixel Format Image

Following figure shows the relationship between input signal and LCD pixel format.

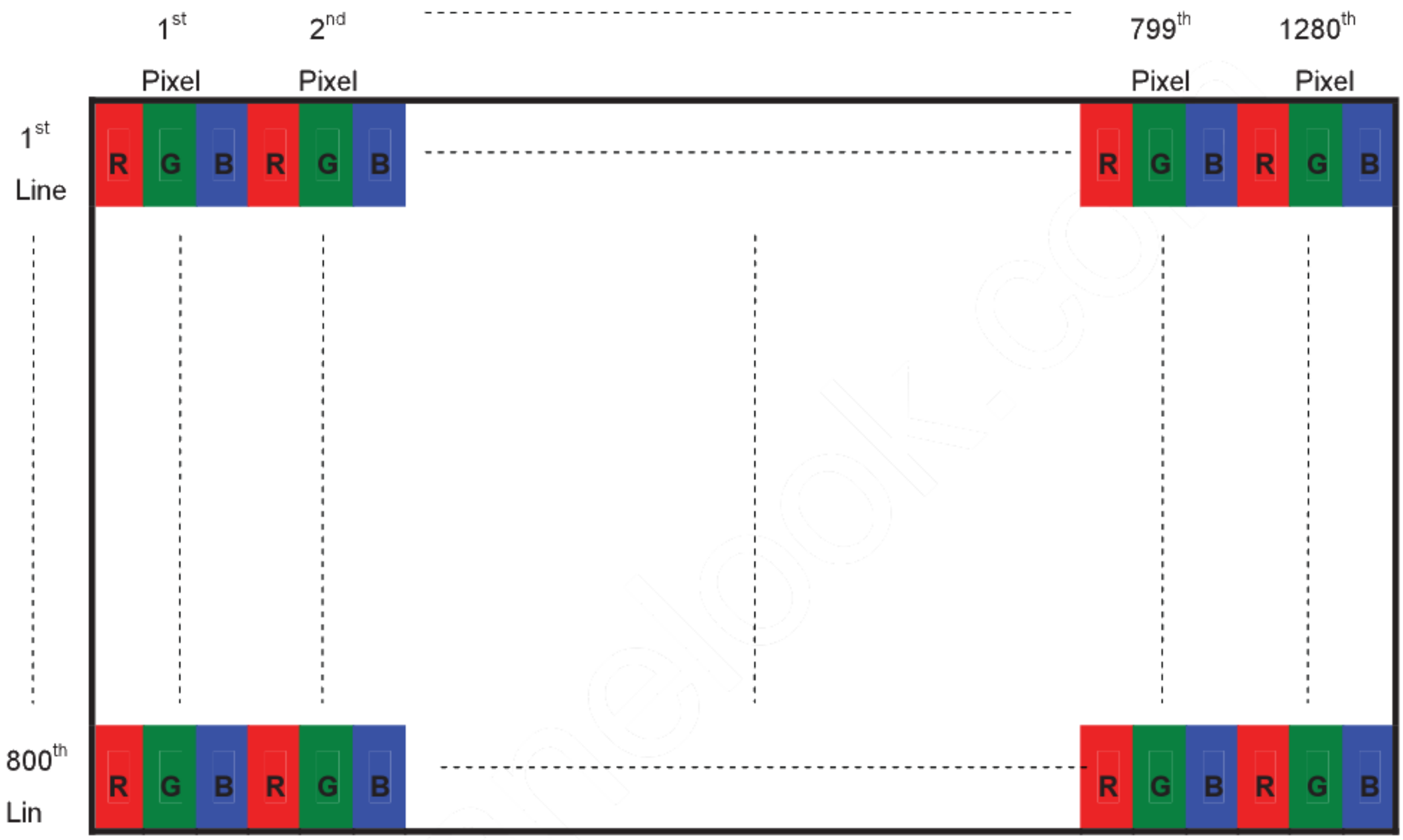

6.3 Signal Description

The module uses a LVDS receiver embedded in AUO's ASIC. LVDS is a differential signal technology for LCD interface and a high-speed data transfer device.

6.3.1 LVDS Connector Description

Physical interface is described as for the connector on module.

These connectors are capable of accommodating the following signals and will be following components.

Connector Name / Designation	For Signal Connector
Manufacturer	JAE or Compatible
Type / Part Number	JAE HD1S040HA1 or Compatible
Mating Housing/Part Number	IPEX 20453-040T-11or Compatible

6.3.2 LVDS Pin Assignment

LVDS is a differential signal technology for LCD interface and high speed data transfer device.

Pin No	Symbol	Function
1	NC	No Connection (Reserve)
2	VDD	Power Supply +3.3V
3	VDD	Power Supply +3.3V
4	VEDID	EDID +3.3V Power
5	NC	No Connection (Reserve)
6	CLK_EDID	EDID Clock Input
7	DAT_EDID	EDID Data Input
8	Rin0-	-LVDS differential data input(R0-R5,G0)
9	Rin0+	+LVDS differential data input(R0-R5,G0)
10	GND	Ground
11	Rin1-	-LVDS differential data input(G1-G5,B0-B1)
12	Rin1+	+LVDS differential data input(G1-G5,B0-B1)
13	GND	Ground
14	Rin2-	-LVDS differential data input(B2-B5,HS,VS,DE)
15	Rin2+	+LVDS differential data input(B2-B5,HS,VS,DE)
16	GND	Ground
17	ClkIN-	-LVDS differential clock input
18	ClkIN+	+LVDS differential clock input
19	GND	Ground–Shield
20	NC	No Connection (Reserve)
21	NC	No Connection (Reserve)
22	GND	Ground–Shield

23	NC	No Connection (Reserve)
24	NC	No Connection (Reserve)
25	GND	Ground–Shield
26	NC	No Connection (Reserve)
27	NC	No Connection (Reserve)
28	GND	Ground–Shield
29	NC	No Connection (Reserve)
30	NC	No Connection (Reserve)
31	VLED_GND	LED Ground
32	VLED_GND	LED Ground
33	VLED_GND	LED Ground
34	NC	No Connection (Reserve)
35	VPWM_EN	System PWM Logic Input Level
36	VLED_EN	LED enable input level
37	NC	No Connection (Reserve)
38	VLED	LED Power Supply
39	VLED	LED Power Supply
40	VLED	LED Power Supply

Note 1: Input Signals shall be in low status when VDD is off.

Note 2: High stands for "3.3V", Low stands for "0V", NC means "No Connection".

Note 3: RSV means "Reserved".

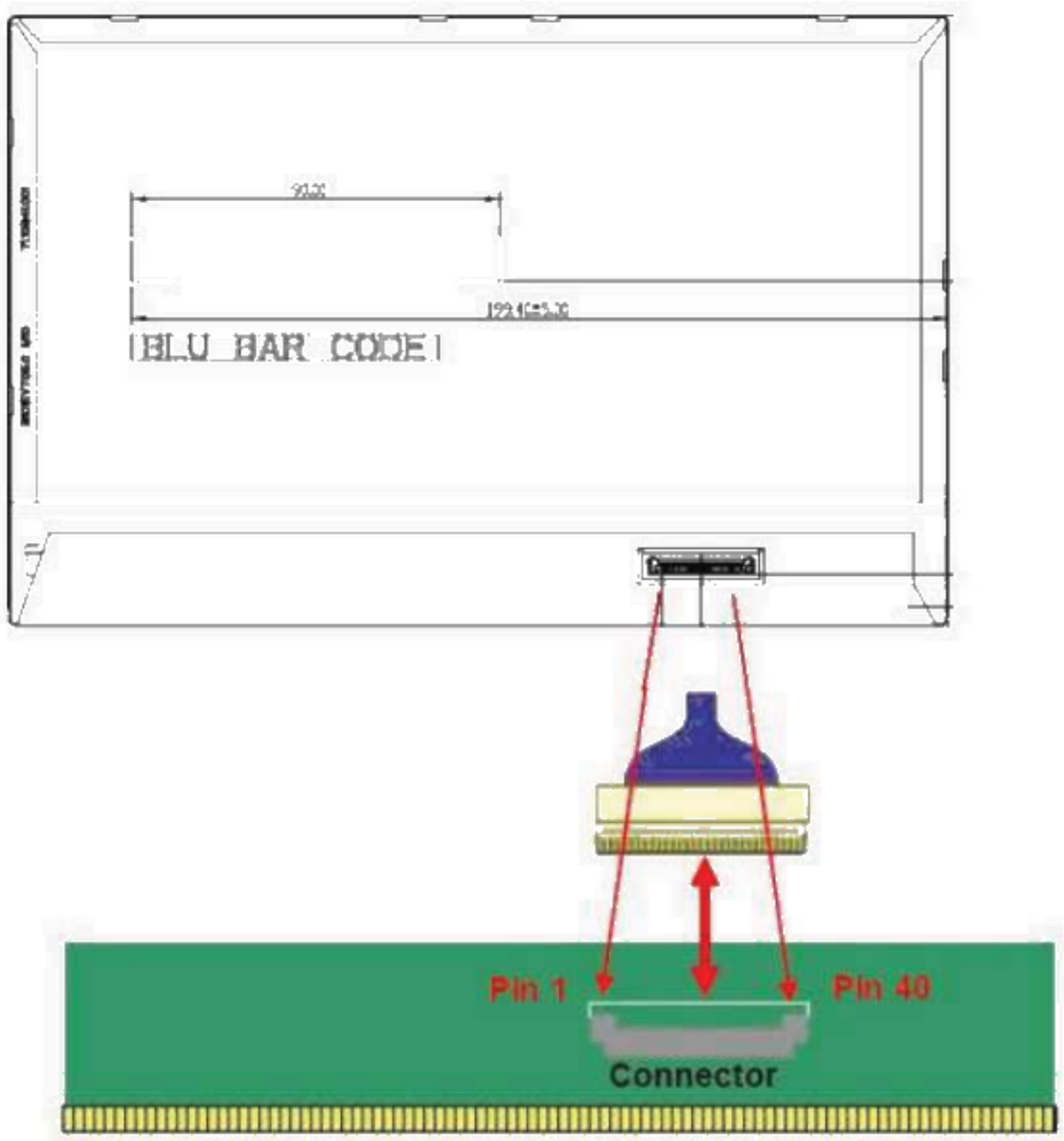

Note1: Input signals shall be low or High-impedance state when VDD is off.

6.4 The Input Data Format

Signal Name	Description	
R5 R4 R3 R2 R1 R0	Red Data 5 (MSB) Red Data 4 Red Data 3 Red Data 2 Red Data 1 Red Data 0 (LSB) Red-pixel Data	Red-pixel Data Each red pixel's brightness data consists of these 6 bits pixel data.
G5 G4 G3 G2 G1 G0	Green Data 5 (MSB) Green Data 4 Green Data 3 Green Data 2 Green Data 1 Green Data 0 (LSB) Green-pixel Data	Green-pixel Data Each green pixel's brightness data consists of these 6 bits pixel data.
B5 B4 B3 B2 B1 B0	Blue Data 5 (MSB) Blue Data 4 Blue Data 3 Blue Data 2 Blue Data 1 Blue Data 0 (LSB) Blue-pixel Data	Blue-pixel Data Each blue pixel's brightness data consists of these 6 bits pixel data.
RxCLKIN	Data Clock	The signal is used to strobe the pixel data and DE signals. All pixel data shall be valid at the falling edge when the DE signal is high.
DE	Display Timing	This signal is strobed at the falling edge of RxCLKIN. When the signal is high, the pixel data shall be valid to be displayed.
VS	Vertical Sync	The signal is synchronized to RxCLKIN .
HS	Horizontal Sync	The signal is synchronized to RxCLKIN .

Note: Output signals from any system shall be low or High-impedance state when VDD is off.

6.5 Interface Timing

6.5.1 Timing Characteristics

Signal		Symbol	Min.	Typ.	Max.	Unit
Clock Frequency		$1/T_{Clock}$	64	68.93	85	MHz
Vertical Section	Period	T_V	808	816	1023	T_{Line}
	Active	T_{VD}	800			
	Blanking	T_{VB}	8	16	223	
Horizontal Section	Period	T_H	1310	1408	2047	T_{Clock}
	Active	T_{HD}	1280			
	Blanking	T_{HB}	40	168	767	
Frame Rate		F	---	60	---	Hz

Note : DE mode.

6.5.2 Input Timing Diagram

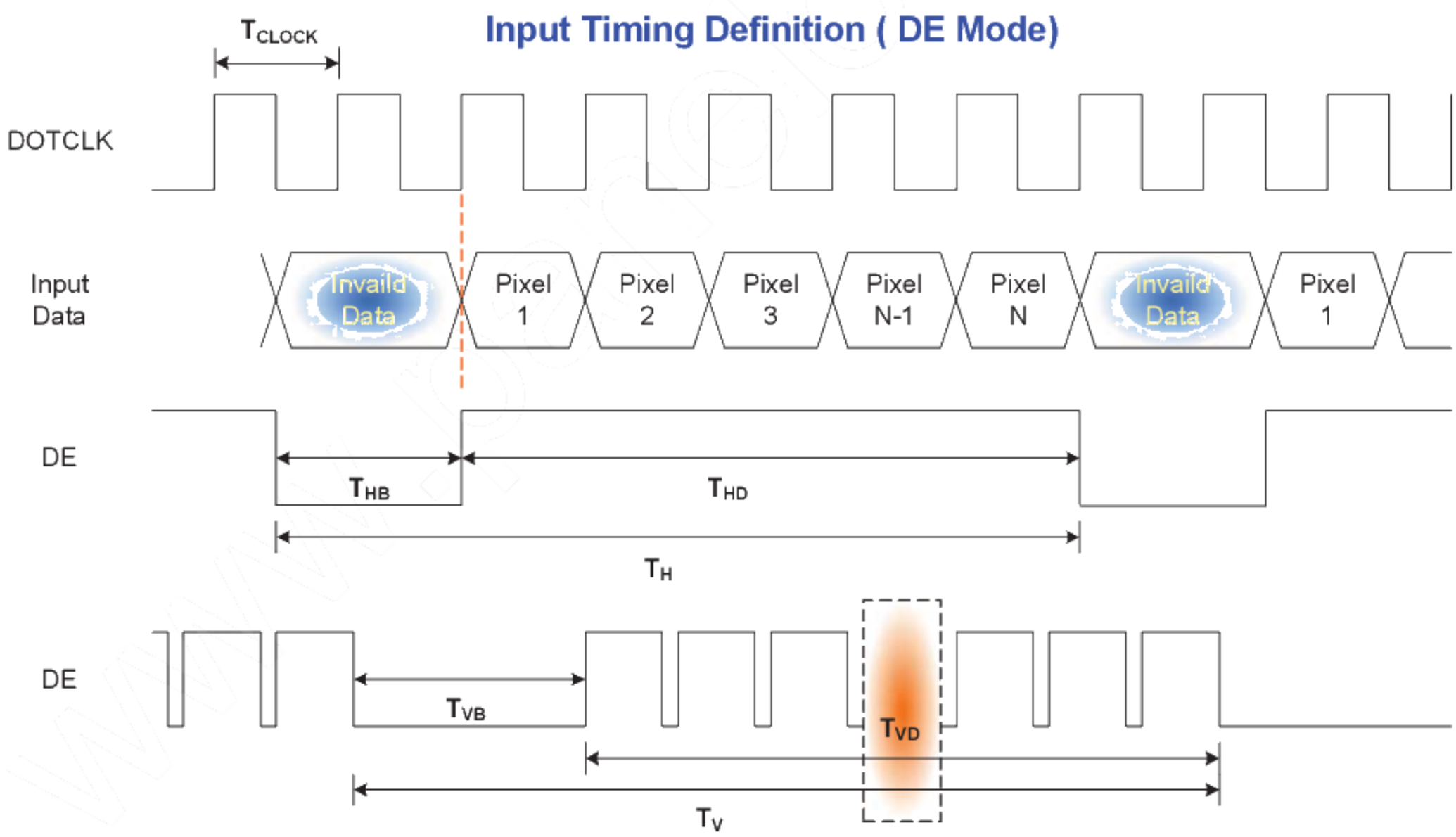

6.6 Power ON/OFF Sequence

VDD power and lamp on/off sequence is as below. Interface signals are also shown in the chart. Signals from any system shall be Hi-Z state or low level when VDD is off.

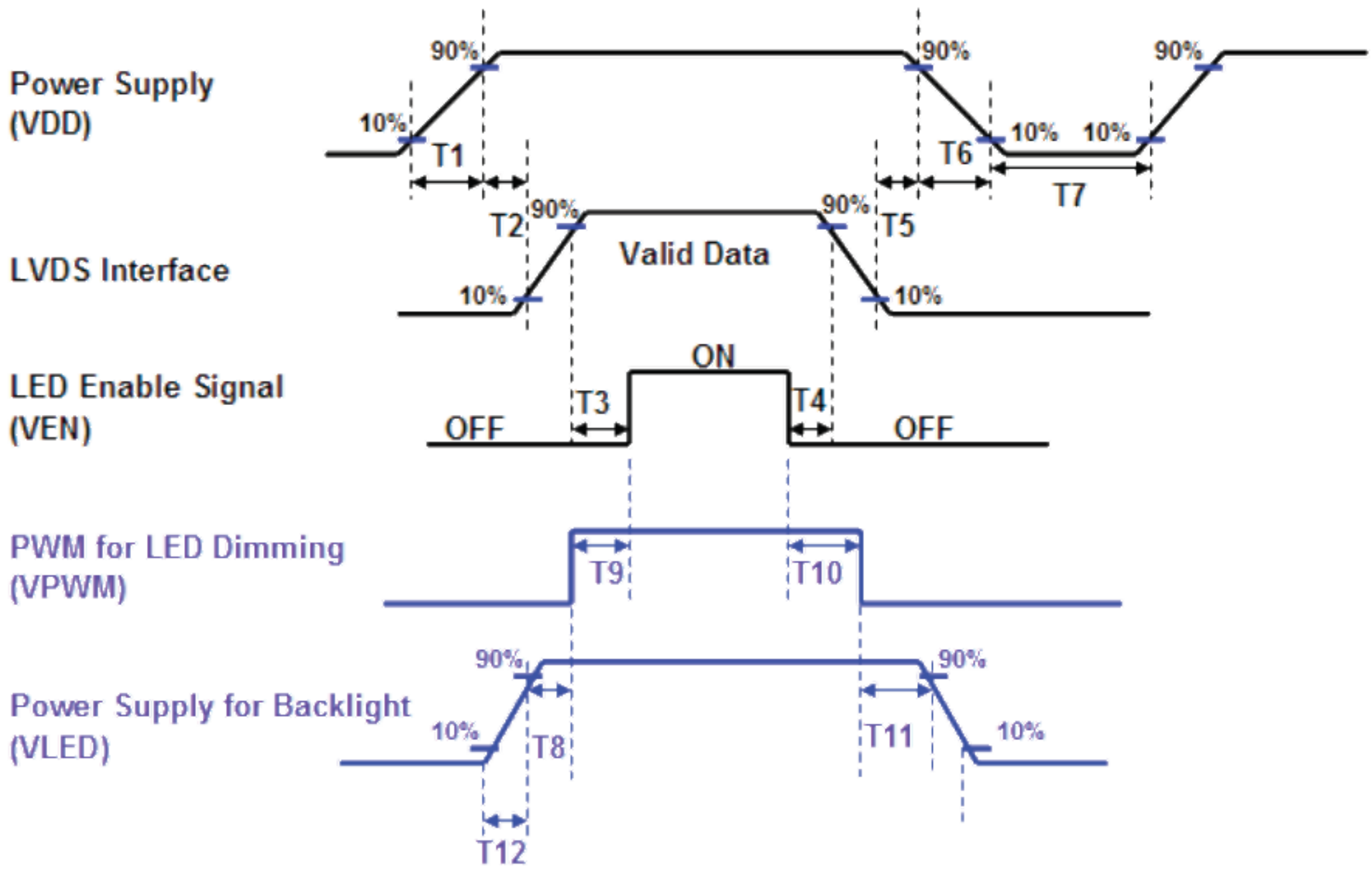

Power ON/OFF sequence timing

Parameter	Value			Units
	Min.	Typ.	Max.	
T1	0.5		10	[ms]
T2	0		50	[ms]
T3	200		-	[ms]
T4	200		-	[ms]
T5	0		50	[ms]
T6	0		10	[ms]
T7	500		-	[ms]
T8	10		-	[ms]
T9	0		180	[ms]
T10	0		180	[ms]
T11	10		-	[ms]
T12	0.5		10	[ms]

The above on/off sequence should be applied to avoid abnormal function in the display. Please make sure to turn off the power when you plug the cable into the input connector or pull the cable out of the connector.

7. Reliability Test Criteria

Items	Required Condition	Note
Temperature Humidity Bias	40 °C /90%,300Hr	
High Temperature Operation	60 °C, 300Hr (center point of panel surface)	
Low Temperature Operation	-20 °C, 300Hr	
Hot Storage	70 °C, 300Hr	
Cold Storage	-30 °C, 300Hr	
Thermal Shock Test	-30 °C /30 min , 70 °C /30 min , 20cycles	
Hot Start Test	60 °C /1 Hr min. power on/off per 5 minutes, 5 times	
Cold Start Test	-20 °C /1 Hr min. power on/off per 5 minutes, 5 times	
On/off test	On/10 sec, Off/10 sec, 30,000 cycles	
ESD	Contact : ± 8KV/ operation, Class B Air : ± 15KV / operation, Class B	Note 1

Note1: According to EN61000-4-2 , ESD class B: Some performance degradation allowed. No data lost

. Self-recoverable. No hardware failures.

Note2:

- Water condensation is not allowed for each test items.
- Each test is done by new TFT-LCD module. Don't use the same TFT-LCD module repeatedly for reliability test.
- The reliability test is performed only to examine the TFT-LCD module capability.
- To inspect TFT-LCD module after reliability test, please store it at room temperature and room humidity for 24 hours at least in advance.

8. Mechanical Characteristics

8.1 LCM Outline Dimension (Front View)

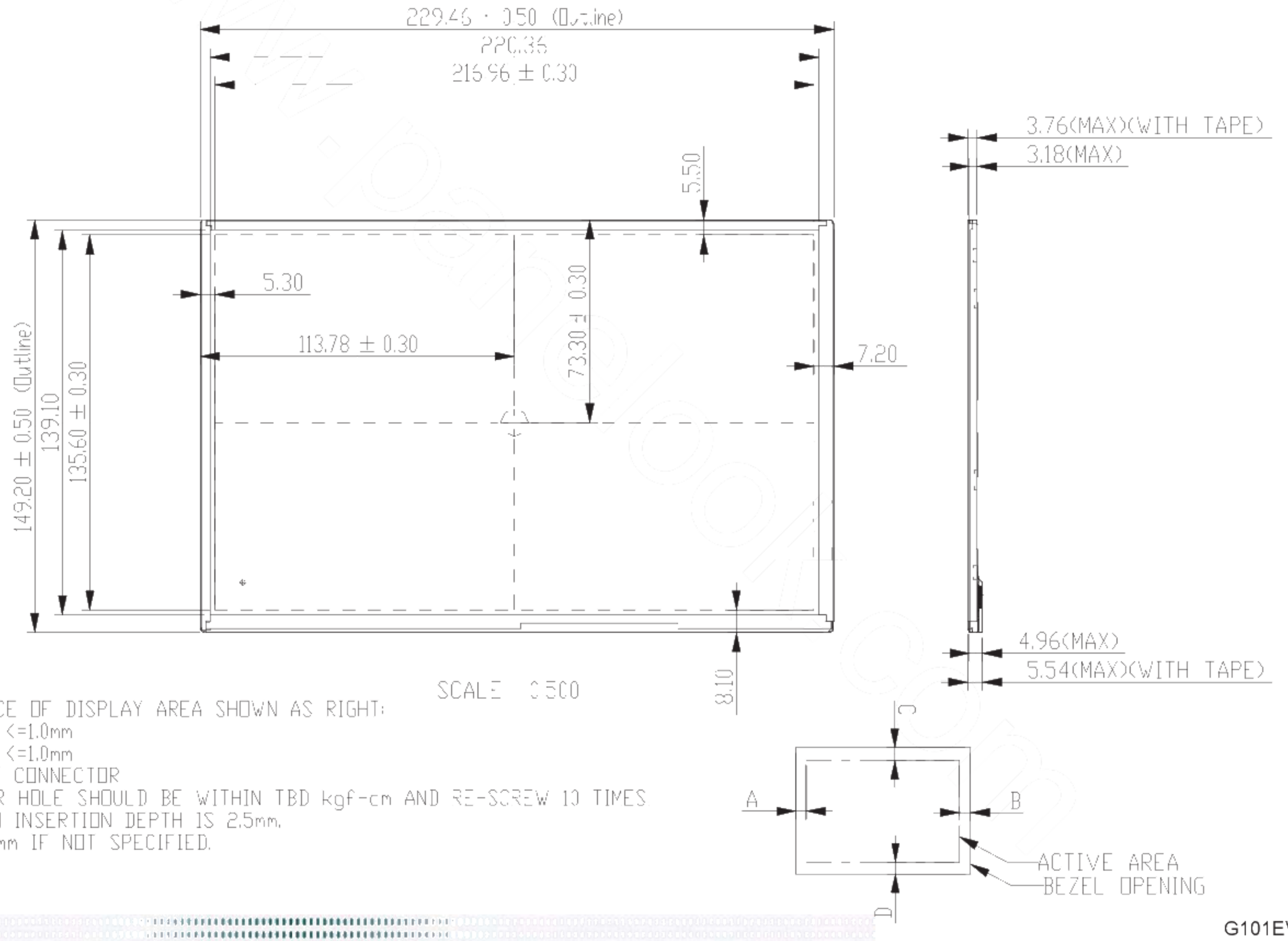

NOTE:
1.BLIGQUITY TOLERANCE OF DISPLAY AREA SHOWN AS RIGHT:
X-DIRECTION: |A-B| <=1.0mm
Y-DIRECTION: |C-D| <=1.0mm
2.CN1: THE INTERFACE CONNECTOR
3.TORQUE OF M2 USER HOLE SHOULD BE WITHIN TBD kgf-cm AND RE-SCREW 10 TIMES
4.USER HOLE MAXIMUN INSERTION DEPTH IS 2.5mm.
5.TOLERANCE IS ' 0.5mm IF NOT SPECIFIED.

8.2 LCM Outline Dimension (Rear View)

9. Label and Packaging

9.1 Shipping Label (on the rear side of TFT-LCD display)

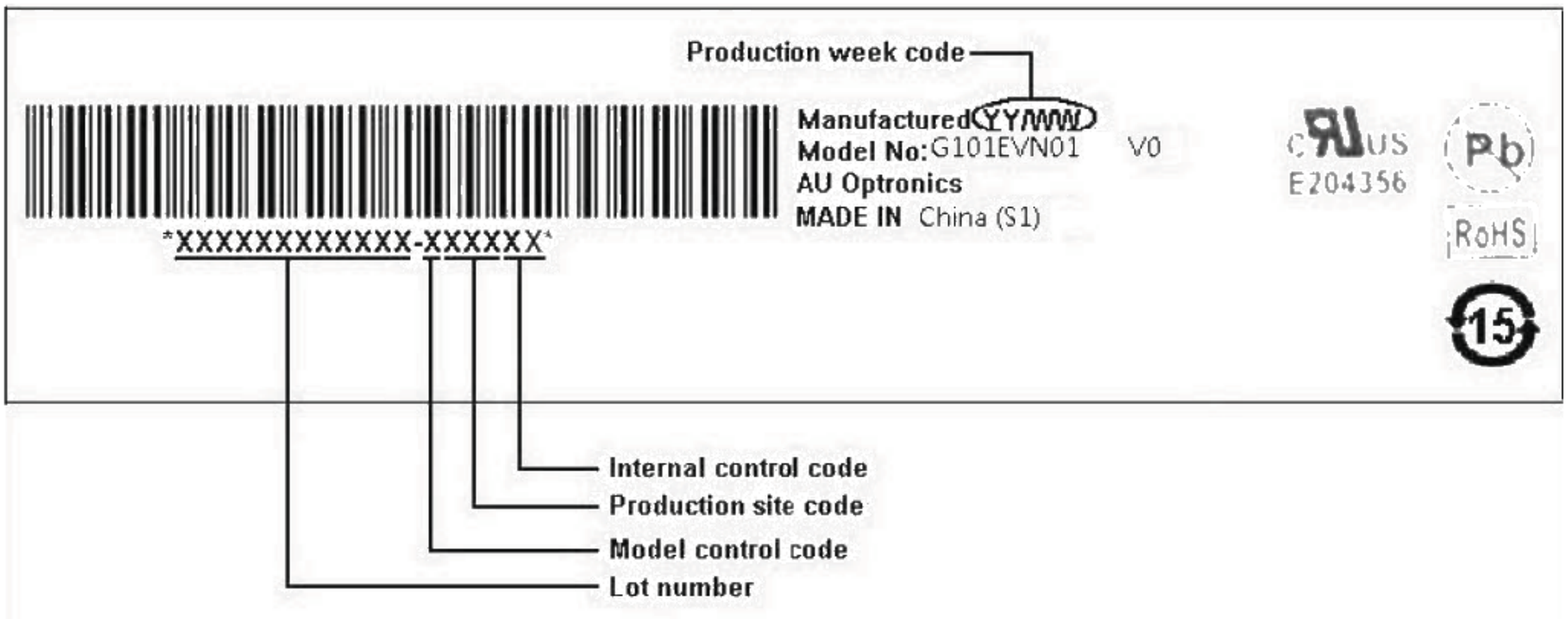

9.2 Carton Package

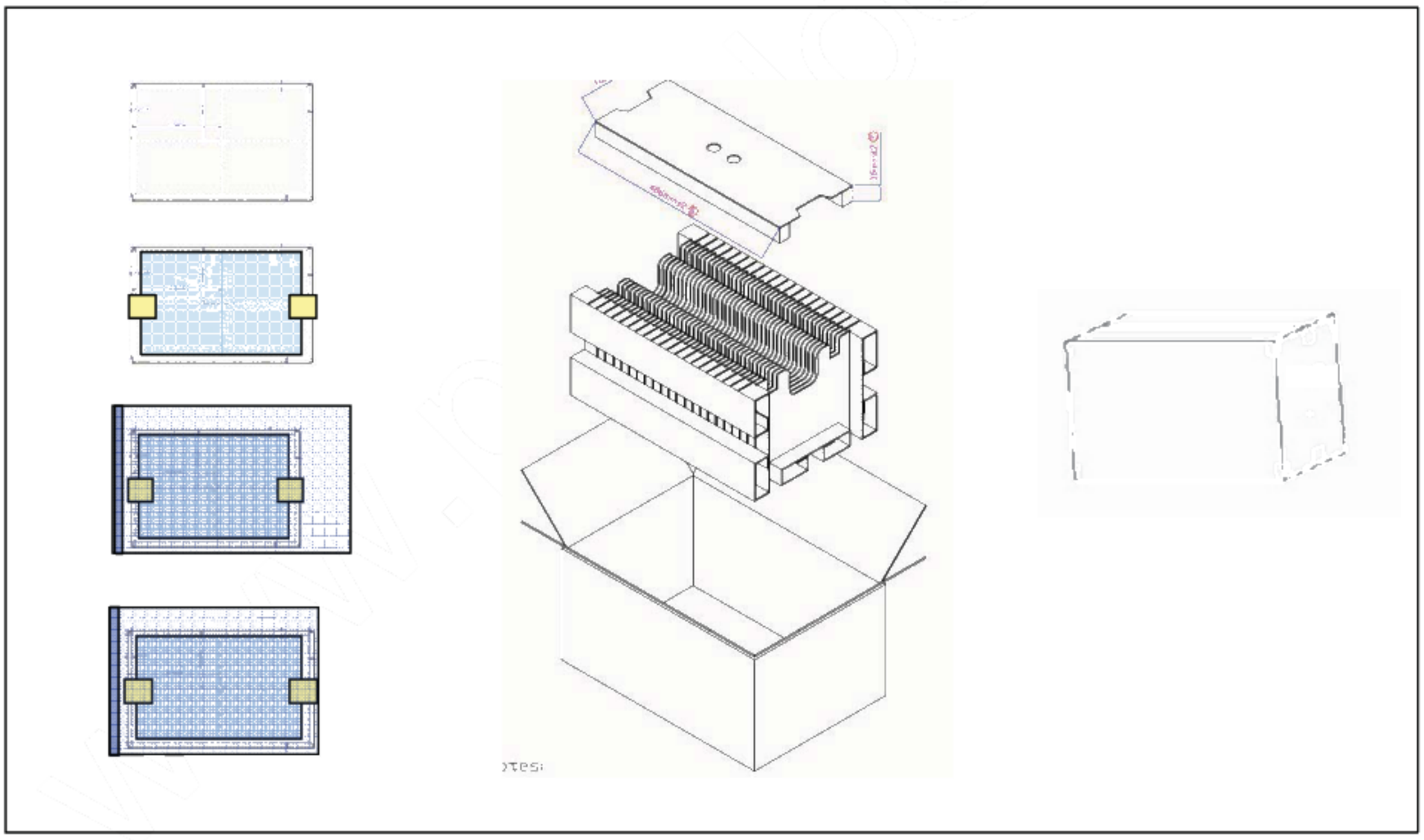

Max capacity：40 TFT-LCD module per carton

Max weight: 9.2 kg per carton

Outside dimension of carton: 484(L)*328(W)*257(H)mm

Pallet size：1450mm*980mm*138mm

10 Safety

10.1 Sharp Edge Requirements

There will be no sharp edges or comers on the display assembly that could cause injury.

10.2 Materials

10.2.1 Toxicity

There will be no carcinogenic materials used anywhere in the display module. If toxic materials are used, they will be reviewed and approved by the responsible AUO toxicologist.

10.2.2 Flammability

All components including electrical components that do not meet the flammability grade UL94-V1 in the module will complete the flammability rating exception approval process.

The printed circuit board will be made from material rated 94-V1 or better. The actual UL flammability rating will be printed on the printed circuit board.

10.3 Capacitors

If any polarized capacitors are used in the display assembly, provisions will be made to keep them from being inserted backwards.

10.4 National Test Lab Requirement

The display module will satisfy all requirements for compliance to:

UL 60950-1 second edition	U.S.A. Information Technology Equipment