(V) Preliminary Specifications
( ) Final Specifications

Module	12.1 Inch Color TFT-LCD
Model Name	G121EAN01.0

Customer	**Date**	**Approved by**	**Date**
		Grace Hung	2016/06/01
Checked & Approved by		**Prepared by**	
		Kevin Tseng	2016/06/01
		General Display Business Division / AU Optronics corporation	

Contents

1. Operating Precautions 4
2. General Description 5
2.1 Display Characteristics 5
2.2 Optical Characteristics 6
3. Functional Block Diagram 9
4. Absolute Maximum Ratings 10
4.1 Absolute Ratings of TFT LCD Module 10
4.2 Absolute Ratings of Environment 10
5. Electrical Characteristics 11
5.1 TFT LCD Module 11
5.2 Backlight Unit 13
6. Signal Characteristics 14
6.1 Pixel Format Image 14
6.2 Signal Description 15
6.3 The Input Data Format 16
6.4 TFT-LCD Interface Timing 17
6.5 Power ON/OFF Sequence 18
7. Reliability Test Criteria 19
8. Mechanical Characteristics 20
8.1 LCM Outline Dimension (Front View) 20
8.2 LCM Outline Dimension (Rear View) 21
9. Label and Packaging 22
9.1 Shipping Label (on the rear side of TFT-LCD display) 22
9.2 Carton Package 22
10 Safety 23
10.1 Sharp Edge Requirements 23
10.2 Materials 23
10.3 Capacitors 23
10.4 National Test Lab Requirement 23

Record of Revision

Version and Date	Page	Old description	New Description
0.0 2016/02/05	All	First Edition	
0.1 2016/03/10	9	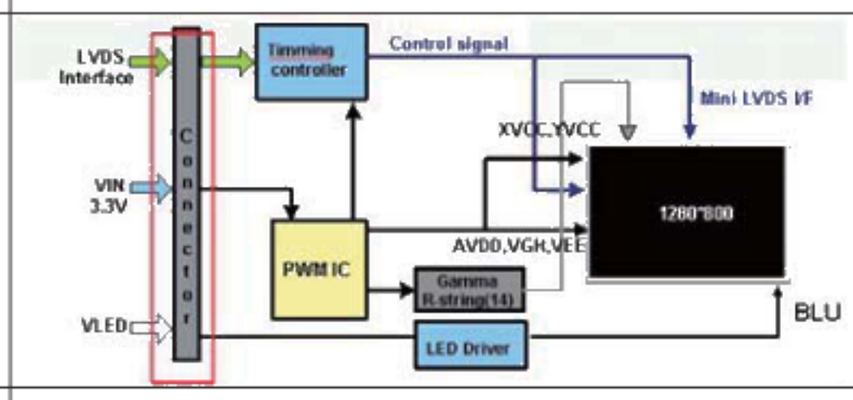	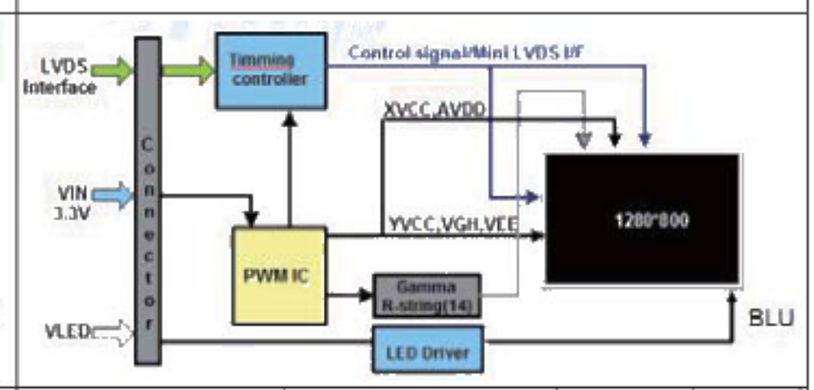
	10	Item / Symbol / Min / Max / Unit Logic/LCD Drive Voltage / VDD / -0.3 / +3.8 / [Volt] Contorl Signals / SEL68, REVERSE / -0.3 / VDD / [Volt] LVDS Signals / CLKIN -/+, RIN0 - 3-/+ / -0.3 / VDD / [Volt] LED Input Voltage / VCC / -0.3 / +13 / [Volt] LED Control Signals / EN, PWM / -0.3 / +6 / [Volt] Item / Symbol / Min / Max / Unit Operating Temperature / TOP / -30 / +85 / [°C] Operation Humidity / HOP / 5 / 95 / [%RH] Storage Temperature / TST / -30 / +85 / [°C] Storage Humidity / HST / 5 / 95 / [%RH]	Item / Symbol / Min / Max Logic/LCD Drive Voltage / VDD / -0.3 / +3.8 Contorl Signals / SEL68 / -0.3 / VDD LVDS Signals / CLKIN -/+, RIN0 – 3-/+ / -0.3 / 0.6 LED Input Voltage / VLED / -0.3 / 15 LED Control Signals / EN, PWM / -0.3 / +6 Item / Symbol / Min / Max / Unit Operating Temperature / TOP / -30 / +85 / [°C] Operation Humidity / HOP / 5 / 90 / [%RH] Storage Temperature / TST / -30 / +85 / [°C] Storage Humidity / HST / 5 / 90 / [%RH]
	13	Symbol / Parameter / Min / Typ / Max / Unit / Remark VCC / Input Voltage / 10.8 / 12 / 12.6 / [Volt] / - I_{VCC} / Input Current / – / 0.33 / 0.4 / [A] / VCC=12V & 100% PWM Duty P_{VCC} / Power Consumption / - / 3.96 / 4.8 / [Watt] / VCC=12V & 100% PWM Duty V_{EN} / EN Control Level / BL On / 3 / - / 5.5 / [Volt] / - V_{EN} / EN Control Level / BL Off / 0 / - / 0.5 / [Volt] / - F_{PWM} / Dimming Frequency / 200 / - / 20K / [Hz] / - D_{PWM} / Dimming Duty Cycle / 5 / – / 100 / % / - V_{PWM} / Dimming Control Level / High Level / 3 / - / 5.5 / [Volt] / - V_{PWM} / Dimming Control Level / Low Level / 0 / - / 0.5 / [Volt] / - I_F / LED Forward Current / – / 50 / - / [mA] / Ta = 25°C V_F / LED Forward Voltage / - / 24.4 / 31.24 / [Volt] / I_F = 45 mA, Ta = 25°C P_{LED} / LED Power Consumption / – / 4.88 / 6.25 / [Watt] / - LED life time / - / 70,000 / 100,000 / - / Hrs / I_F = 45 mA, Ta = 25°C	Symbol / Parameter / Min / Typ / Max / Unit / Remark VLED / Input Voltage / 10 / 12 / 13 / [Volt] / - I_{VCC} / Input Current / - / 0.51 / 0.65 / [A] / VCC=12V & 100% PWM Duty P_{VCC} / Power Consumption / - / 6.1 / 6.5 / [Watt] / VCC=12V & 100% PWM Duty V_{EN} / EN Control Level / BL On / 2.5 / - / 5 / [Volt] / - V_{EN} / EN Control Level / BL Off / 0 / - / 0.5 / [Volt] / - F_{PWM} / Dimming Frequency / 200 / - / 20K / [Hz] / - D_{PWM} / Dimming Duty Cycle / 1 / - / 100 / % / 1.5% with rise/fall time V_{PWM} / Dimming Control Level / High Level / 3 / - / 5.5 / [Volt] / - V_{PWM} / Dimming Control Level / Low Level / 0 / - / 0.5 / [Volt] / - I_F / LED Forward Current / – / 50 / - / [mA] / Ta = 25°C V_F / LED Forward Voltage / – / 24.4 / 31.24 / [Volt] / I_F = 50 mA, Ta = 25°C P_{LED} / LED Power Consumption / – / 4.88 / 6.25 / [Watt] / - LED life time / - / 70,000 / 100,000 / - / Hrs / I_F = 50 mA, Ta = 25°C
	13	Note 3: I_F, V_F are defined for one channel LED. There are three LED channel in back light unit.	Note 3: I_F, V_F are defined for one channel LED. There are four LED channel in back light unit.
	15	Pin NO / Signal Name / Description 1 / 12V / LED Power 2 / 12V / LED Power 3 / 12V / LED Power 4 / 12V / LED Power 5 / ENLED / Enable Pin 6 / Dimming / Backlight Adjust 7 / GND / Ground 8 / GND / Ground 9 / VCC / Power supply +3.3V 10 / VCC / Power supply +3.3V	Pin NO / Signal Name / Description 1 / VLED / LED Power Input 2 / VLED / LED Power Input 3 / VLED / LED Power Input 4 / VLED / LED Power Input 5 / EN / LED Driver Enable 6 / PWM / LED Driver Backlight Adjust 7 / GND / Ground 8 / GND / Ground 9 / VDD / Power supply +3.3V 10 / VDD / Power supply +3.3V
0.2 2016/4/8	6	Color Gamut=70%	Color Gamut=72%
0.3 2016/6/1	22	9.2 Carton Package	Update Catron Package information

1. Operating Precautions

1) Since front polarizer is easily damaged, please be cautious and not to scratch it.
2) Be sure to turn off power supply when inserting or disconnecting from input connector.
3) Wipe off water drop immediately. Long contact with water may cause discoloration or spots.
4) When the panel surface is soiled, wipe it with absorbent cotton or soft cloth.
5) Since the panel is made of glass, it may be broken or cracked if dropped or bumped on hard surface.
6) To avoid ESD (Electro Static Discharge) damage, be sure to ground yourself before handling TFT-LCD Module.
7) Do not open nor modify the module assembly.
8) Do not press the reflector sheet at the back of the module to any direction.
9) In case if a module has to be put back into the packing container slot after it was taken out from the container, do not press the center of the LED light bar edge. Instead, press at the far ends of the LED light bar edge softly. Otherwise the TFT Module may be damaged.
10) At the insertion or removal of the Signal Interface Connector, be sure not to rotate nor tilt the Interface Connector of the TFT Module.
11) TFT-LCD Module is not allowed to be twisted & bent even force is added on module in a very short time. Please design your display product well to avoid external force applying to module by end-user directly.
12) Small amount of materials without flammability grade are used in the TFT-LCD module. The TFT-LCD module should be supplied by power complied with requirements of Limited Power Source (IEC60950 or UL1950), or be applied exemption.
13) Severe temperature condition may result in different luminance, response time and lamp ignition voltage.
14) Continuous operating TFT-LCD display under low temperature environment may accelerate lamp exhaustion and reduce luminance dramatically.
15) The data on this specification sheet is applicable when LCD module is placed in landscape position.
16) Continuous displaying fixed pattern may induce image sticking. It's recommended to use screen saver or shuffle content periodically if fixed pattern is displayed on the screen.

2. General Description

This specification applies to the Color Active Matrix Liquid Crystal Display G121EAN01.0 composed of a TFT-LCD display, a driver and power supply circuit, and a LED backlight system.

The screen format is intended to support WXGA (1280(H) x 800(V)) screen and 16.7M (8-bits) or 262k colors (6-bits). LED driving board for backlight unit is included in G121EAN01.0. G121EAN01.0 designed with wide viewing angle; wide temperature and long life LED backlight is well suited for industial applications. G121EAN01.0 is a RoHS product.

2.1 Display Characteristics

The following items are characteristics summary on the table under 25 ℃ condition:

Items	Unit	Specifications
Screen Diagonal	[inch]	12.1
Active Area	[mm]	261.12(H) x 163.2(V)
Pixels H x V		1280 x 3(RGB) x 800
Pixel Pitch	[mm]	0.204 x 0.204
Pixel Arrangement		R.G.B. Vertical Stripe
Display Mode		Normally Black
Nominal Input Voltage VDD	[Volt]	3.3 (typ.)
Typical Power Consumption	[Watt]	TBD
Weight	[Grams]	TBD (max)
Physical Size	[mm]	278.0(H) x 184.0(V) x 9.29(D) (Typ.)
Electrical Interface		1 channel LVDS
Surface Treatment		Anti-glare, Hardness 3H
Support Color		16.7M / 262K colors
Temperature Range Operating Storage (Non-Operating)	 [°C] [°C]	 -30 to +85 -30 to +85
RoHS Compliance		RoHS Compliance

2.2 Optical Characteristics

The optical characteristics are measured under stable conditions at 25℃ (Room Temperature):

Item	Unit	Conditions	Min.	Typ.	Max.	Remark
White Luminance	[cd/m2]	I_F= 50mA/1 LED Line (center point)	400	500	-	Note 1
Uniformity	%	5 Points	75	-	-	Note 2, 3
Contrast Ratio			800	1000	-	Note 4
Response Time	[msec]	Rising	-	-	-	Note 5
	[msec]	Falling	-	-	-	
	[msec]	Raising + Falling	-	25	-	
Viewing Angle	[degree] [degree]	Horizontal (Right) CR = 10 (Left)	80 80	89 89	- -	Note 6
	[degree] [degree]	Vertical (Upper) CR = 10 (Lower)	80 80	89 89	- -	
Color / Chromaticity Coordinates (CIE 1931)		Red x	TBD	TBD	TBD	
		Red y	TBD	TBD	TBD	
		Green x	TBD	TBD	TBD	
		Green y	TBD	TBD	TBD	
		Blue x	TBD	TBD	TBD	
		Blue y	TBD	TBD	TBD	
		White x	0.263	0.313	0.363	
		White y	0.279	0.329	0.379	
Color Gamut	%			72	-	

Note 1: Measurement method

Equipment Pattern Generator, Power Supply, Digital Voltmeter, Luminance meter (SR_3 or equivalent)

Aperture 1° with 50cm viewing distance

Test Point Center

Environment < 1 *lux*

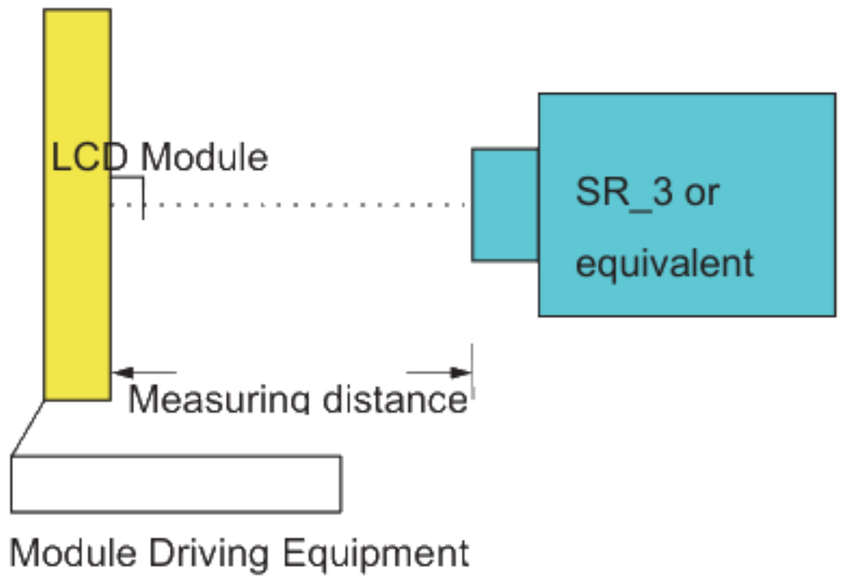

Note 2: Definition of 5 points position (Display active area: 246mm (H) x 184.5mm (V))

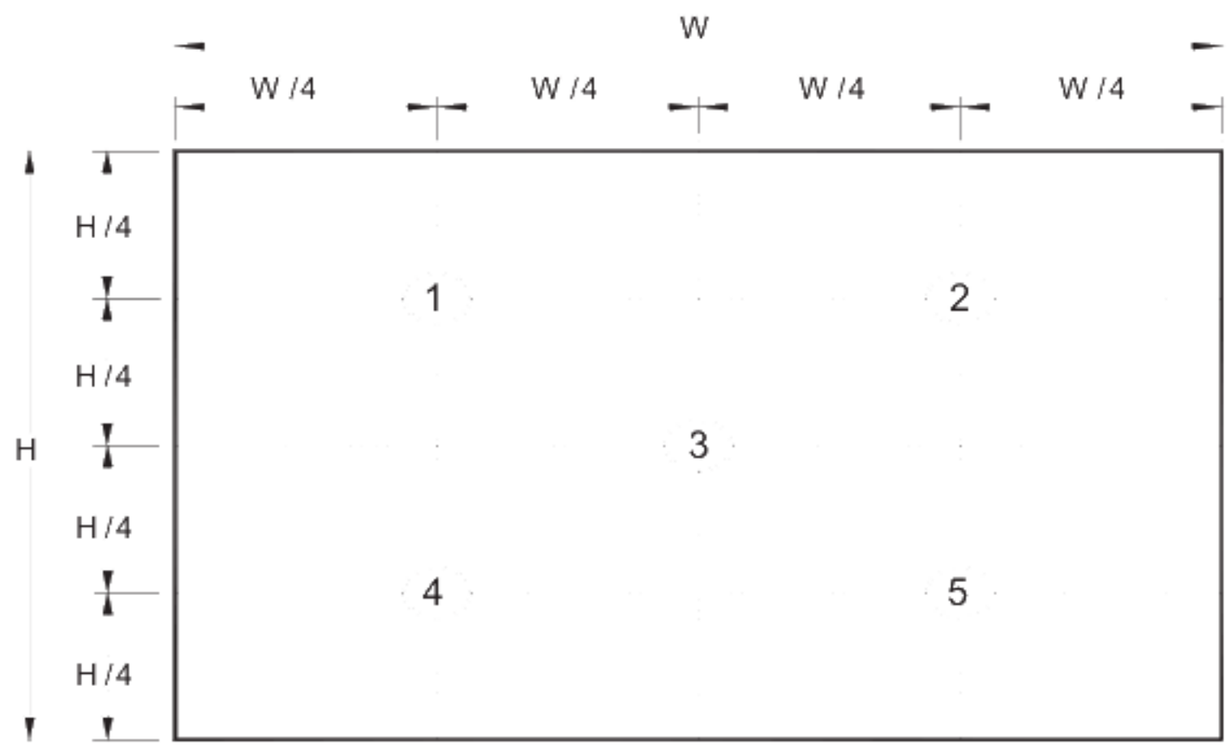

Note 3: The luminance uniformity of 5 points is defined by dividing the minimum luminance values by the maximum test point luminance

$$\delta_{W9} = \frac{\text{Minimum Brightness of five points}}{\text{Maximum Brightness of five points}}$$

Note 4: Definition of contrast ratio (CR):

$$\text{Contrast ratio (CR)} = \frac{\text{Brightness on the “White” state}}{\text{Brightness on the “Black” state}}$$

Note 5: Definition of response time:

The output signals of photo detector are measured when the input signals are changed from “White” to “Black” (falling time) and from “Black” to “White” (rising time), respectively. The response time interval is between 10% and 90% of amplitudes. Please refer to the figure as below.

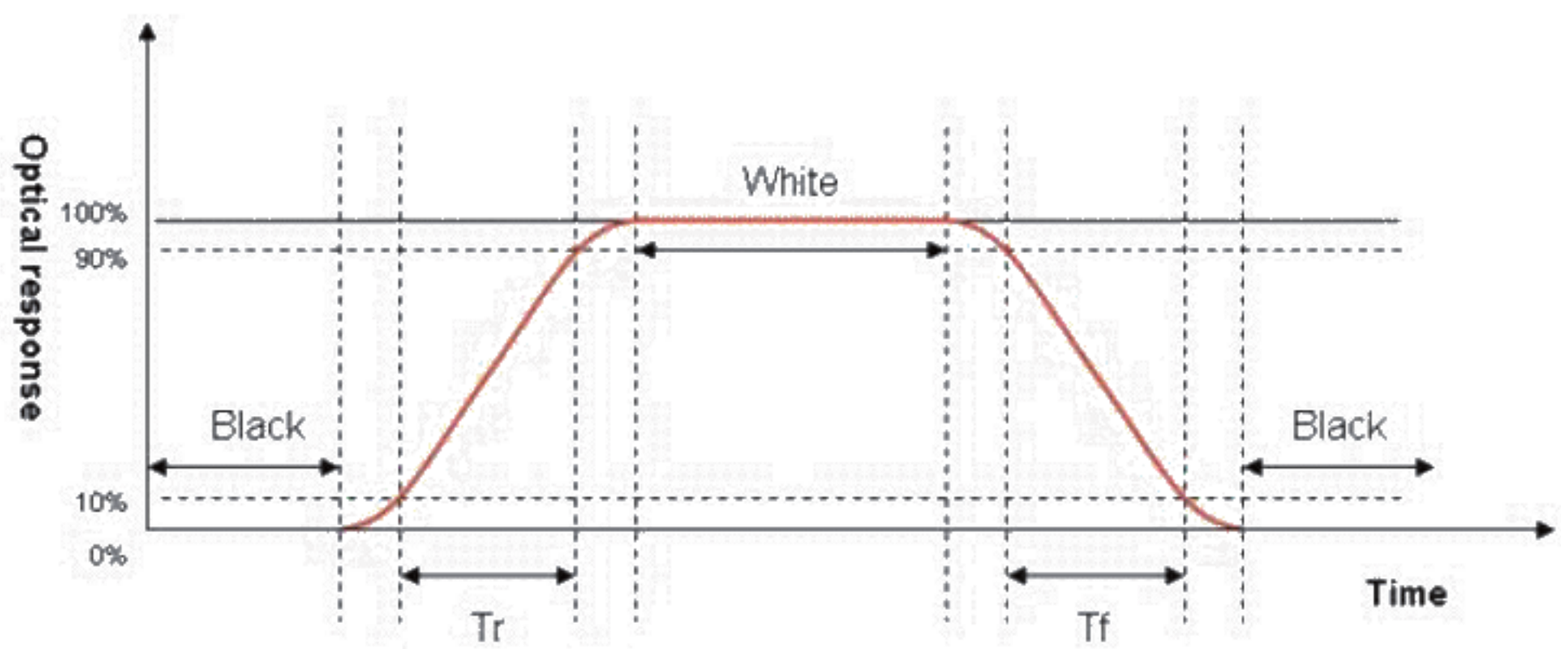

Note 6: Definition of viewing angle

Viewing angle is the measurement of contrast ratio ≧10, at the screen center, over a 180° horizontal and 180° vertical range (off-normal viewing angles). The 180° viewing angle range is broken down as below: 90° (θ) horizontal left and right, and 90° (Φ) vertical high (up) and low (down). The measurement direction is typically perpendicular to the display surface with the screen rotated to its center to develop the desired measurement viewing angle.

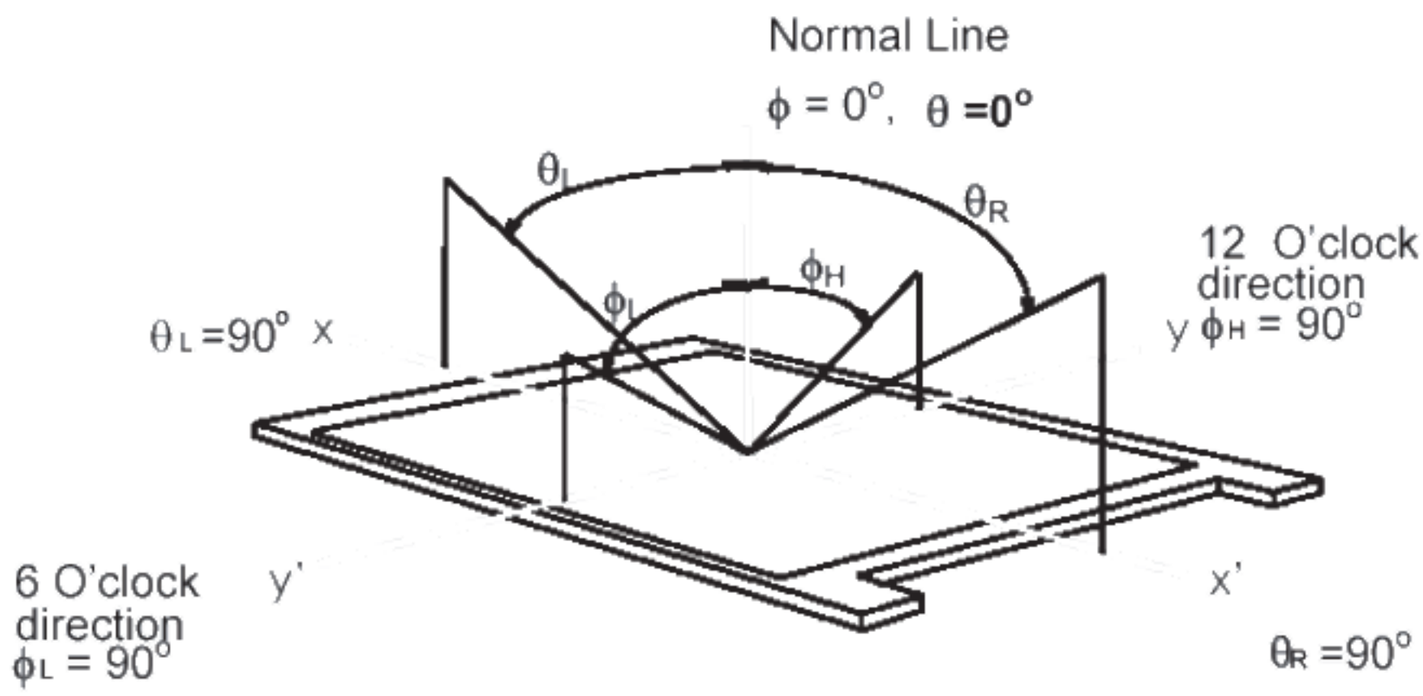

3. Functional Block Diagram

The following diagram shows the functional block of the 12.1 inch color TFT/LCD module:

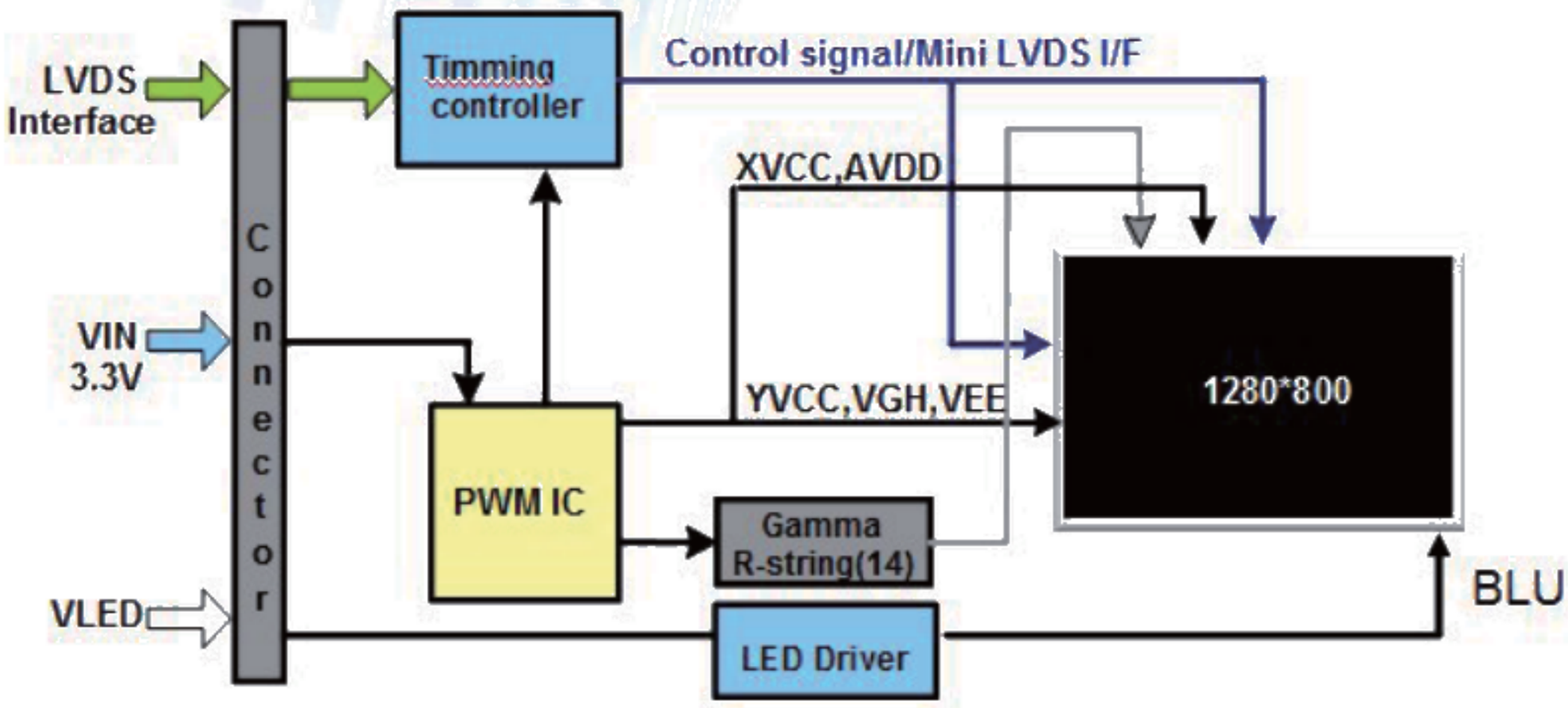

4. Absolute Maximum Ratings

4.1 Absolute Ratings of TFT LCD Module

Item	Symbol	Min	Max	Unit
Logic/LCD Drive Voltage	VDD	-0.3	+3.8	[Volt]
Contorl Signals	SEL68, REVERSE	-0.3	VDD	[Volt]
LVDS Signals	CLKIN -/+, RIN0 ~ 3-/+	-0.3	0.6	[Volt]
LED Input Voltage	VLED	-0.3	15	[Volt]
LED Control Signals	EN, PWM	-0.3	+6	[Volt]

4.2 Absolute Ratings of Environment

Item	Symbol	Min	Max	Unit
Operating Temperature	TOP	-30	+85	[°C]
Operation Humidity	HOP	5	90	[%RH]
Storage Temperature	TST	-30	+85	[°C]
Storage Humidity	HST	5	90	[%RH]

Note: Maximum Wet-Bulb should be 39℃ and no condensation.

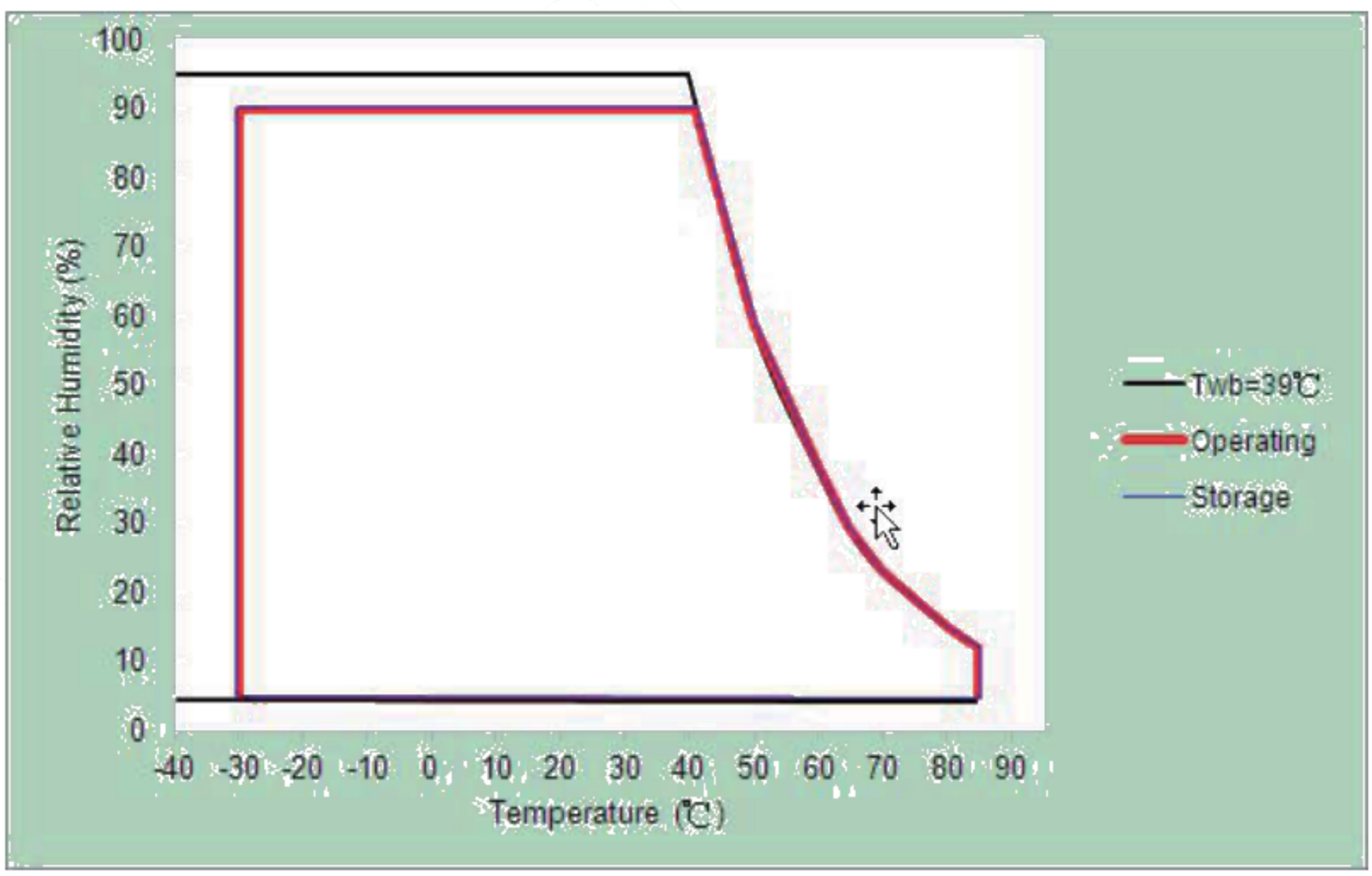

5. Electrical Characteristics

5.1 TFT LCD Module

5.1.1 LCD Electrical Specification

Symbol	Parameter		Min	Typ	Max	Units	Remark
VDD	Logic/LCD Input Voltage		3.0	3.3	3.6	[Volt]	
I_{VDD}	LCD Input Current		-	TBD	-	[mA]	VDD=3.3V at 60 HZ, all Black Pattern
P_{VDD}	LCD Power comsumption		-	TBD	-	[Watt]	VDD=3.3V at 60 HZ, all Black Pattern
$I_{rush\ LCD}$	LCD Inrush Current		-	-	1.5	[A]	VDD=3.3V at 60 HZ, all Black Pattern Note 1 VDD rising time≧470us
VDD_{rp}	Allowable Logic/LCD Drive Ripple Voltage		-	-	100	[mV] p-p	VDD=3.3V at 60 HZ, all Black Pattern
VIH	Control Signals Voltage	High Level	0.7* VDD	-	VDD	[Volt]	SEL68 and REVERSE
VIL		Low Level	0	-	0.3* VDD	[Volt]	SEL68 and REVERSE

Note 1: Measurement condition:

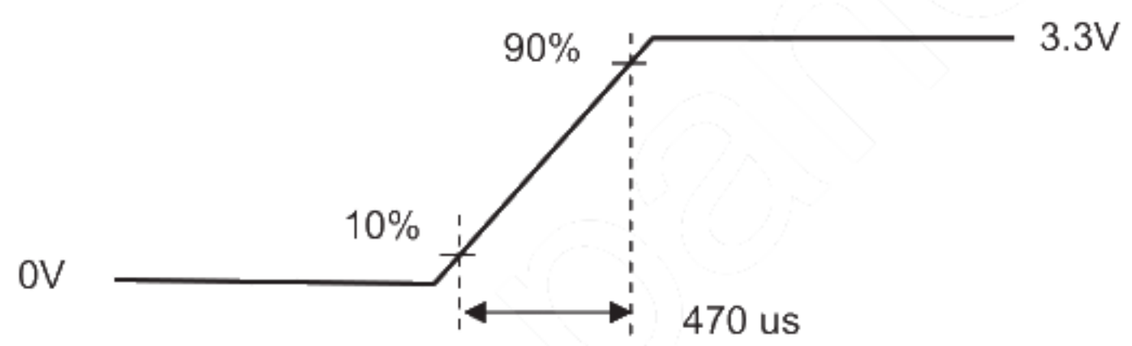

VDD rising time

5.1.2 LVDS Electrical Characteristics

Symbol	Parameter	Min.	Typ.	Max.	Unit	Remark
VTH	Differential Input High Threshold	-	-	100	[mV]	VCM=1.2V
VTL	Differential Input Low Threshold	-100	-	-	[mV]	VCM=1.2V
| VID |	Input Differential Voltage	100	400	600	[mV]	
VICM	Differential Input Common Mode Voltage	1.1	-	1.45	[V]	VTH/VTL=+-100mV

Input signals shall be low or Hi-Z state when VDD is off.

Note: LVDS Signal Waveform.

Single-end Signal

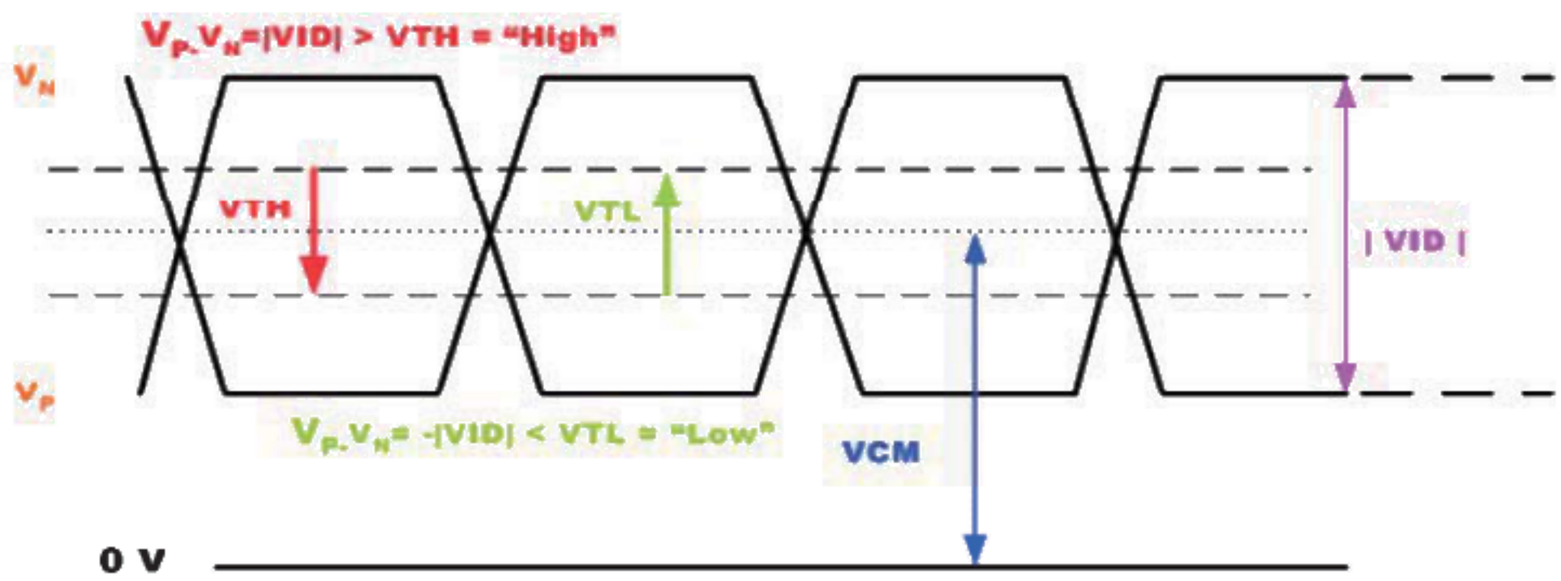

Differential Signal

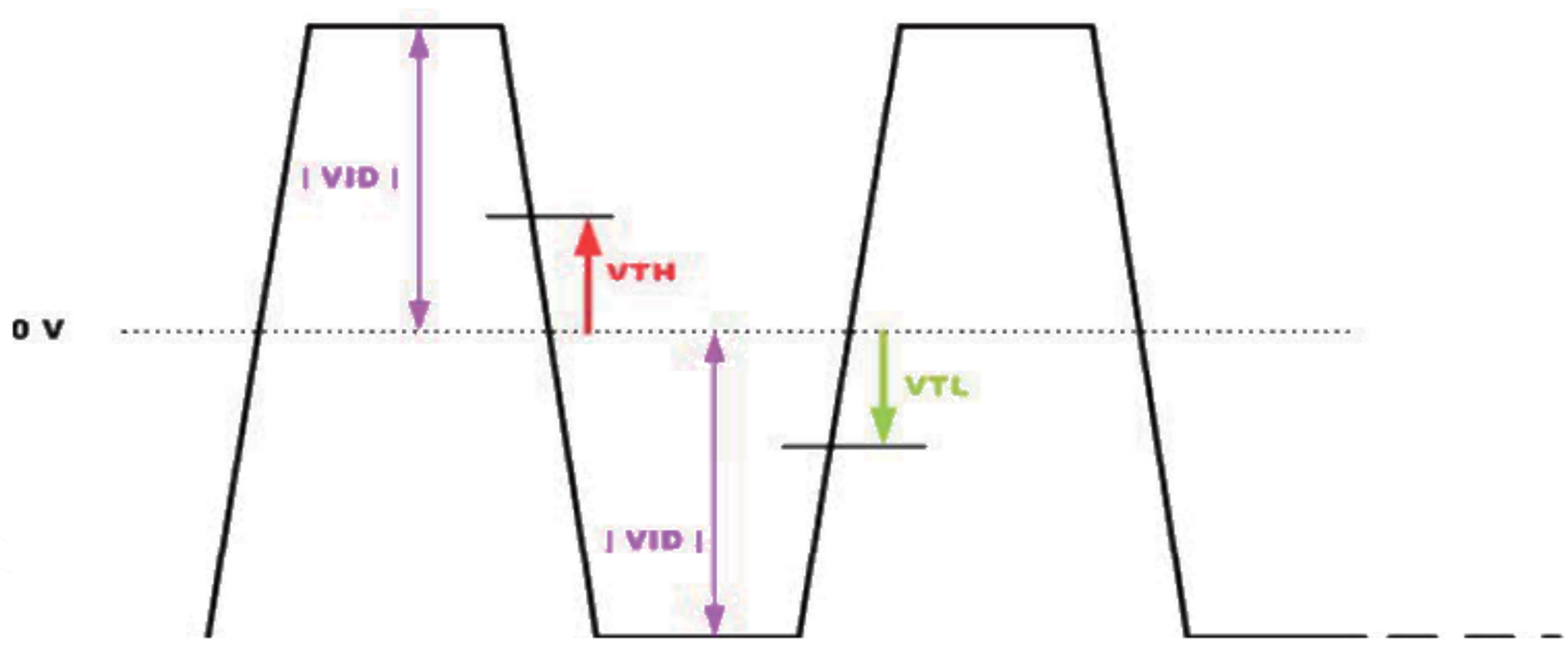

5.2 Backlight Unit

5.2.1 Parameter guideline for LED

Following characteristics are measured under stable condition at 25℃. (Room Temperature):

Symbol	Parameter		Min.	Typ.	Max.	Unit	Remark
VLED	Input Voltage		10	12	15	[Volt]	
I_{VCC}	Input Current		-	0.51	0.65	[A]	VCC=12V & 100% PWM Duty
P_{VCC}	Power Consumption		-	6.1	6.5	[Watt]	VCC=12V & 100% PWM Duty
V_{EN}	EN Control Level	BL On	2.5	-	4	[Volt]	
		BL Off	0	-	0.5	[Volt]	
F_{PWM}	Dimming Frequency		200	-	20K	[Hz]	
D_{PWM}	Dimming Duty Cycle		1	-	100	%	1~5% with non-linear
V_{PWM}	Dimming Control Level	High Level	3	-	5.5	[Volt]	
		Low Level	0	-	0.5	[Volt]	
I_F	LED Forward Current		-	50		[mA]	Ta = 25°C
V_F	LED Forward Voltage		-	24.4	31.24	[Volt]	I_F = 50 mA, Ta = 25°C
P_{LED}	LED Power Consumption		-	4.88	6.25	[Watt]	
LED life time			70,000	100,000	-	Hrs	I_F = 50 mA, Ta = 25°C

Note 1: Ta means ambient temperature of TFT-LCD module.

Note 2: VCC, I_{VCC}, P_{VCC} are defined for LED backlight.(100% duty of PWM dimming)

Note 3: I_F, V_F are defined for one channel LED. There are four LED channel in back light unit.

Note 4: If G121EAN01.0 module is driven by high current or at high ambient temperature & humidity condition. The operating life will be reduced.

Note 5: Operating life means brightness goes down to 50% initial brightness. Minimum operating life time is estimated data.

6. Signal Characteristics

6.1 Pixel Format Image

Following figure shows the relationship between input signal and LCD pixel format.

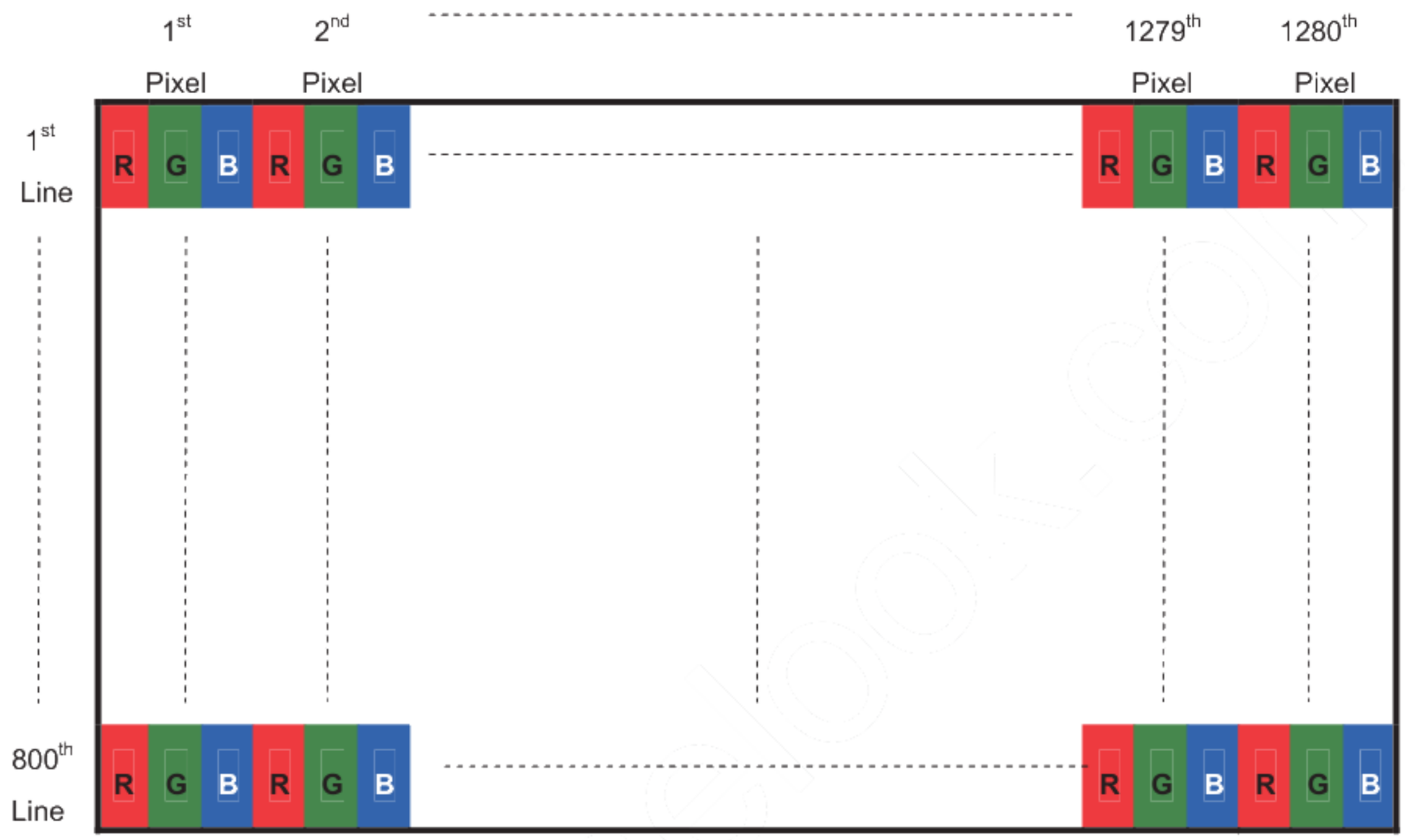

6.2 Signal Description

The module using a LVDS receiver embaded in AUO's ASIC. LVDS is a differential signal technology for LCD interface and a high-speed data transfer device.

6.2.1 TFT LCD Module: LVDS Connector

Connector Name / Designation	Signal Connector
Manufacturer	Starconn
Connector Model Number	093G30-B0001A-1

6.2.2 Input Signal Description

Pin NO	Signal Name	Description
1	VLED	LED Power Input
2	VLED	LED Power Input
3	VLED	LED Power Input
4	VLED	LED Power Input
5	EN	LED Driver Enable
6	PWM	LED Driver Backlight Adjust
7	GND	Ground
8	GND	Ground
9	VDD	Power supply:+3.3V
10	VDD	Power supply:+3.3V
11	GND	Ground
12	GND	Ground
13	RXin0N	-LVDS differential data (0N)
14	RXin0P	+LVDS differential data (0P)
15	GND	Ground
16	RXin1N	-LVDS differential data (1N)
17	RXin1P	+LVDS differential data (1P)
18	GND	Ground
19	RXin2N	-LVDS differential data (2N)
20	RXin2P	+LVDS differential data (2P)
21	GND	Ground
22	LVDS_RX_N	-LVDS differential clock input
23	LVDS_RX_P	+LVDS differential clock input
24	GND	Ground
25	RXin3N	-LVDS differential data (3N)
26	RXin3P	+LVDS differential data (3P)
27	GND	Ground
28	SEL 6/8	Low or NC-->6 bit input mode High-->8 bit input mode
29	GND	Ground
30	GND	Ground

6.3 The Input Data Format

6.3.1 SEL68

SEL68 =“Low” or “NC” for 6 bits LVDS Input

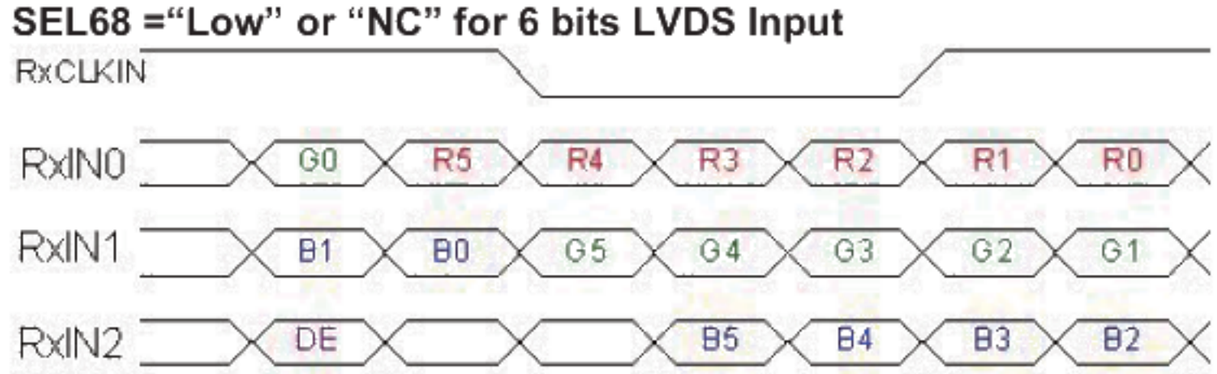

SEL68 = “High” for 8 bits LVDS Input

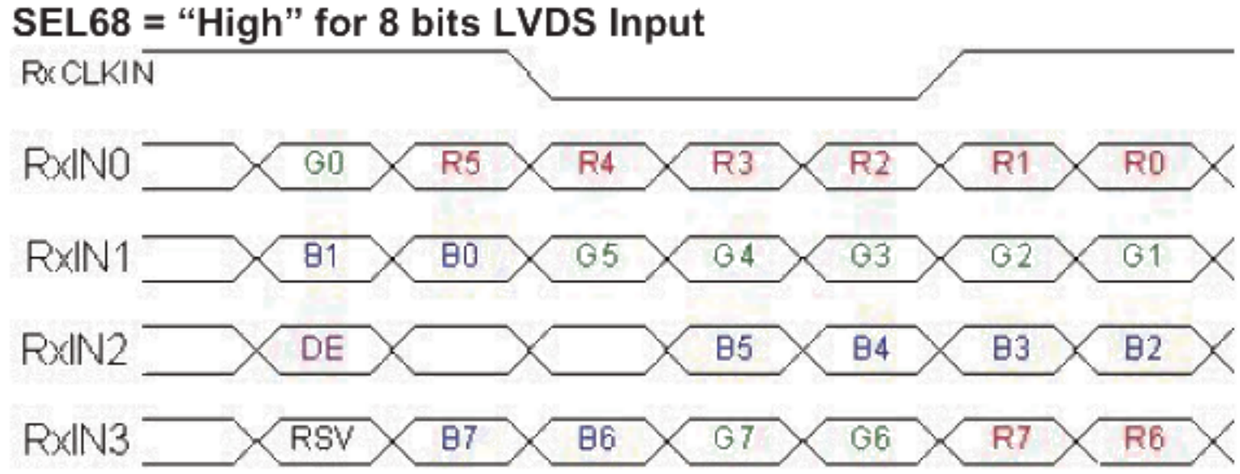

Note 1: Please follow PSWG.
Note 2: R/G/B data 7:MSB, R/G/B data 0:LSB
Note 3: RSV stands for “Reserved”.

Signal Name	Description	Remark
R7 R6 R5 R4 R3 R2 R1 R0	Red Data 7 Red Data 6 Red Data 5 Red Data 4 Red Data 3 Red Data 2 Red Data 1 Red Data 0	Red-pixel Data For 8Bits LVDS input MSB: R7 ; LSB: R0 For 6Bits LVDS input MSB: R5 ; LSB: R0
G7 G6 G5 G4 G3 G2 G1 G0	Green Data 7 Green Data 6 Green Data 5 Green Data 4 Green Data 3 Green Data 2 Green Data 1 Green Data 0	Green-pixel Data For 8Bits LVDS input MSB: G7 ; LSB: G0 For 6Bits LVDS input MSB: G5 ; LSB: G0
B7 B6 B5 B4 B3 B2 B1 B0	Blue Data 7 Blue Data 6 Blue Data 5 Blue Data 4 Blue Data 3 Blue Data 2 Blue Data 1 Blue Data 0	Blue-pixel Data For 8Bits LVDS input MSB: B7 ; LSB: B0 For 6Bits LVDS input MSB: B5 ; LSB: B0
RxCLKIN	LVDS Data Clock	The typical frequency is 40MHz.
DE	Data Enable Signal	When the signal is high, the pixel data shall be valid to be displayed.
RSV	Reserved Signal	“High” or “Low” is acceptable

Note: Output signals from any system shall be low or Hi-Z state when VDD is off.

6.4 TFT-LCD Interface Timing

6.4.1 Timing Characteristics

Signal	Parameter		Symbol	Min.	Typ.	Max.	Unit
Clock Timing	Clock frequency		$1/T_{Clock}$	60	74.4	90	MHz
Vsync Timing	Vertical Section	Period	T_V	808	838	900	Vsync Timing
		Active	T_{VD}	-	800	-	
		Blanking	T_{VB}	8	38	100	
Hsync Timing	Horizontal Section	Period	T_H	1350	1480	1680	Hsync Timing
		Active	T_{HD}	-	1280	-	
		Blanking	T_{HB}	70	200	400	
Frame Rate			F	50	60	75	Hz

6.4.2 Input Timing Diagram

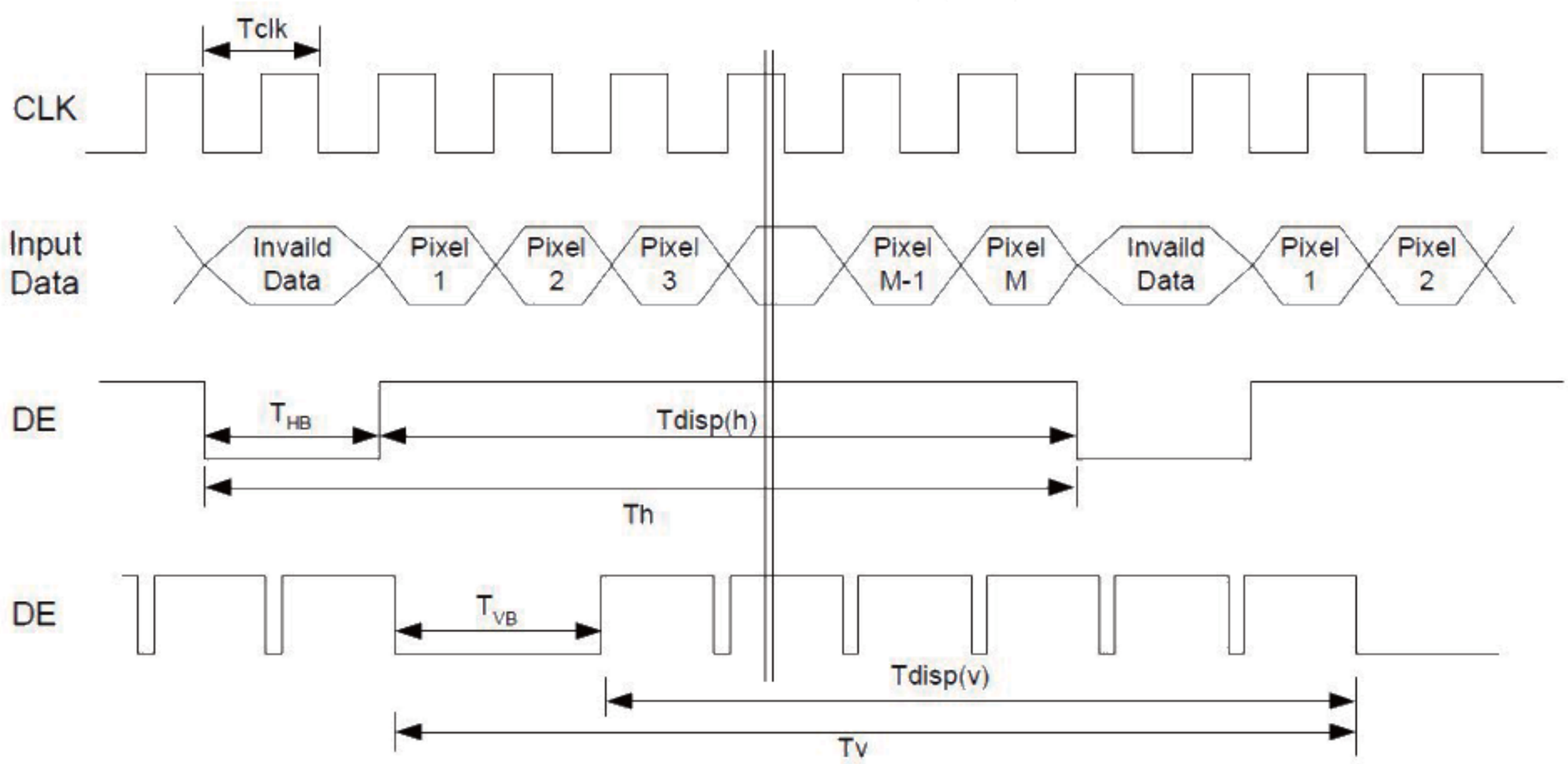

6.5 Power ON/OFF Sequence

VDD power and lamp on/off sequence is as below. Interface signals are also shown in the chart. Signals from any system shall be Hi-Z state or low level when VDD is off.

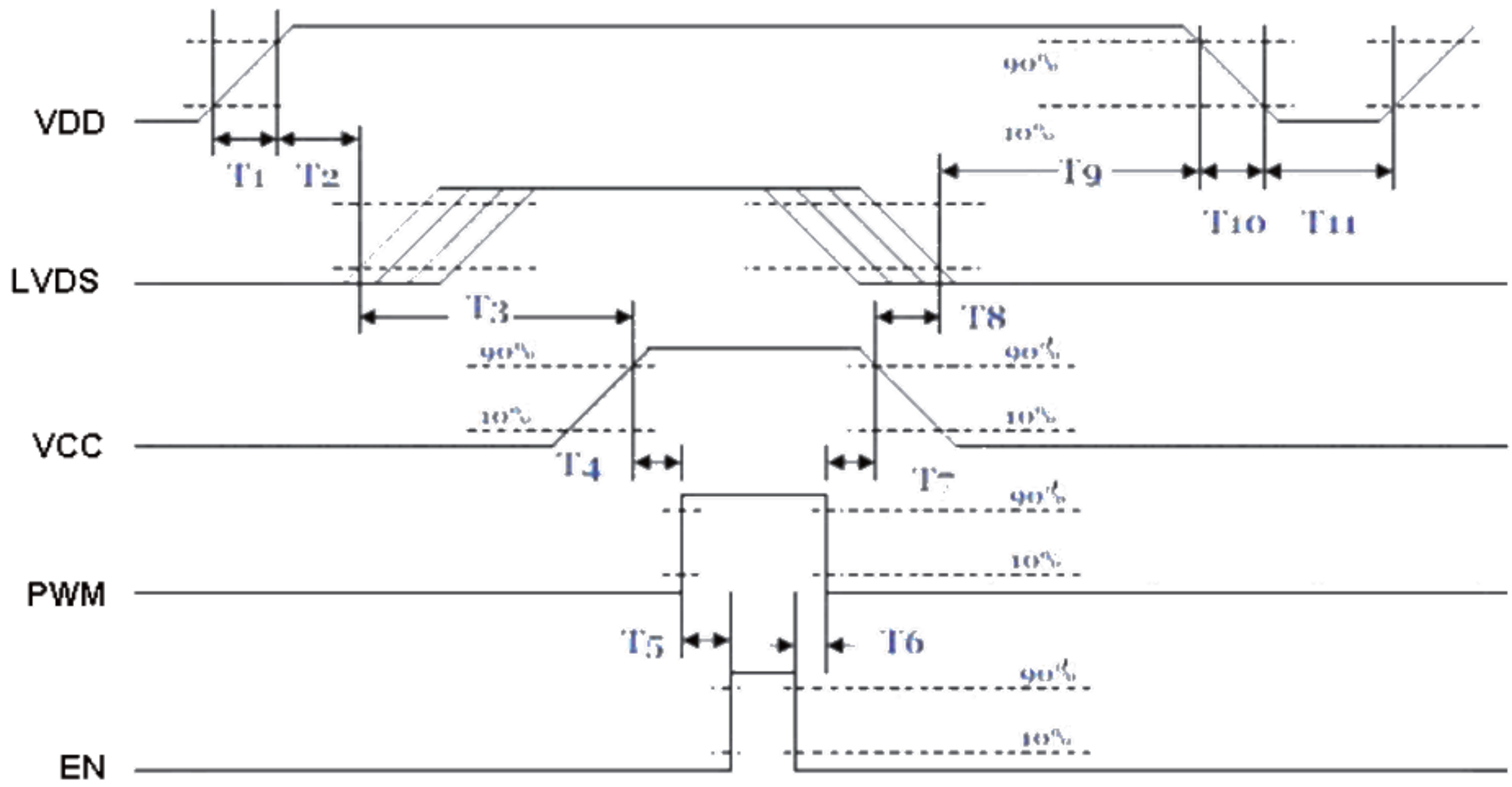

Power ON/OFF sequence timing

Parameter	Value			Units
	Min.	Typ.	Max.	
T1	0.5	-	10	[ms]
T2	30	40	50	[ms]
T3	175	-	-	[ms]
T4	10	-	-	[ms]
T5	10	-	-	[ms]
T6	0	-	-	[ms]
T7	10	-	-	[ms]
T8	100	-	-	[ms]
T9	0	16	50	[ms]
T10	-	-	10	[ms]
T11	1000	-	-	[ms]

The above on/off sequence should be applied to avoid abnormal function in the display. Please make sure to turn off the power when you plug the cable into the input connector or pull the cable out of the connector.

7. Reliability Test Criteria

Items	Required Condition	Note
Temperature Humidity Bias	60 °C, 90%RH, 300 hours	
High Temperature Operation	85 °C, 300 hours	
Low Temperature Operation	-30 °C, 300 hours	
Hot Storage	85 °C, 300 hours	
Cold Storage	-30 °C, 300 hours	
Thermal Shock Test	-20 °C / 30 min, 60 °C / 30 min, 100cycles, 40 °C minimun ramp rate	
Hot Start Test	85 °C / 1Hr min. power on/off per 5 minutes, 5 times	
Cold Start Test	-30 °C / 1Hr min. power on/off per 5 minutes, 5 times	
Shock Test (Non-Operating)	50G, 20ms, Half-sine wave, (±X, ±Y, ±Z)	
Vibration Test (Non-Operating)	1.5G, (10~200Hz, Sine wave) 30 mins/axis, 3 direction (X, Y, Z)	
On/off test	On/10 sec, Off/10 sec, 30,000 cycles	
ESD	Contact = ± 8 kV, class B (R=330,C=150pF) Air = ± 15 kV, class B (R=330,C=150pF) 1sec, 8 points, 25times/point	Note 1
EMI	30-230 MHz, limit 40 dBu V/m, 230-1000 MHz, limit 47 dBu V/m	

Note1: According to EN61000-4-2, ESD class B: Some performance degradation allowed. No data lost Self-recoverable. No hardware failures.

Note2:

- Water condensation is not allowed for each test items.
- Each test is done by new TFT-LCD module. Don't use the same TFT-LCD module repeatedly for reliability test.
- The reliability test is performed only to examine the TFT-LCD module capability.
- To inspect TFT-LCD module after reliability test, please store it at room temperature and room humidity for 24 hours at least in advance.
- In the standard condition, there is not display function NG issue occurred.

8. Mechanical Characteristics

8.1 LCM Outline Dimension (Front View)

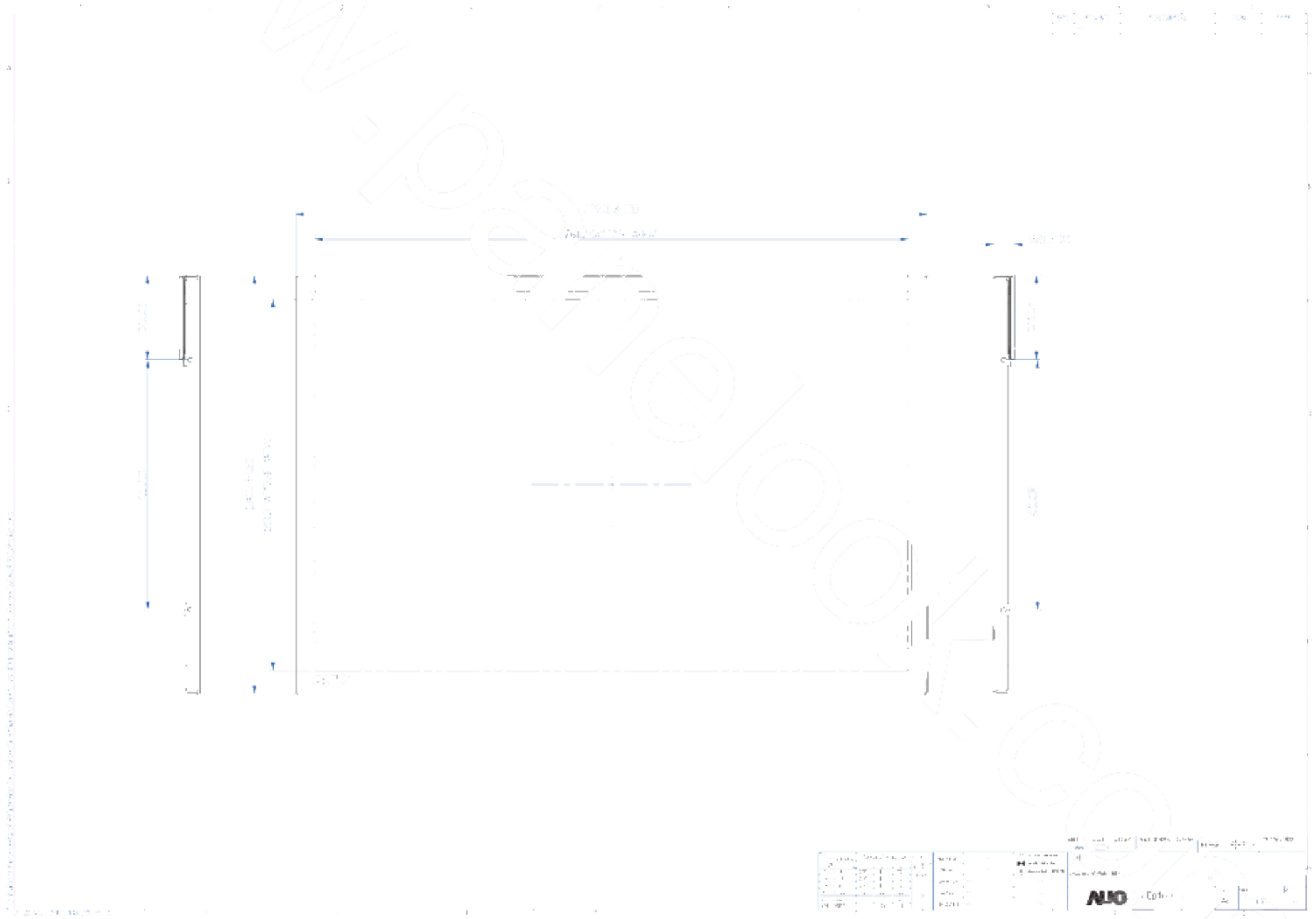

8.2 LCM Outline Dimension (Rear View)

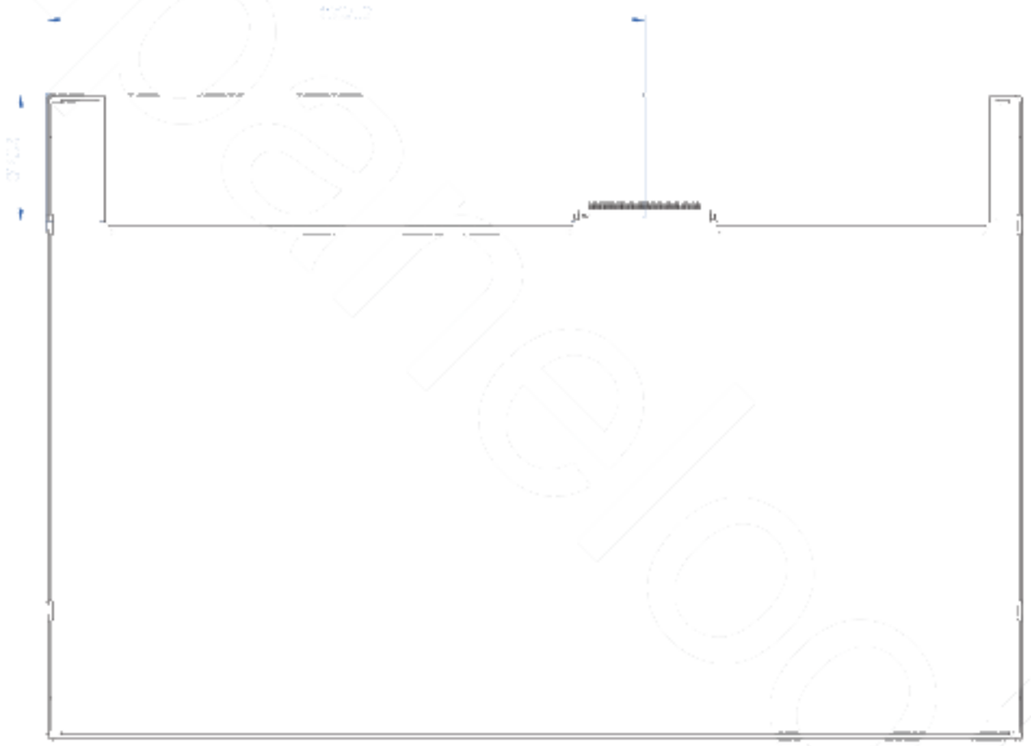

9. Label and Packaging

9.1 Shipping Label (on the rear side of TFT-LCD display)

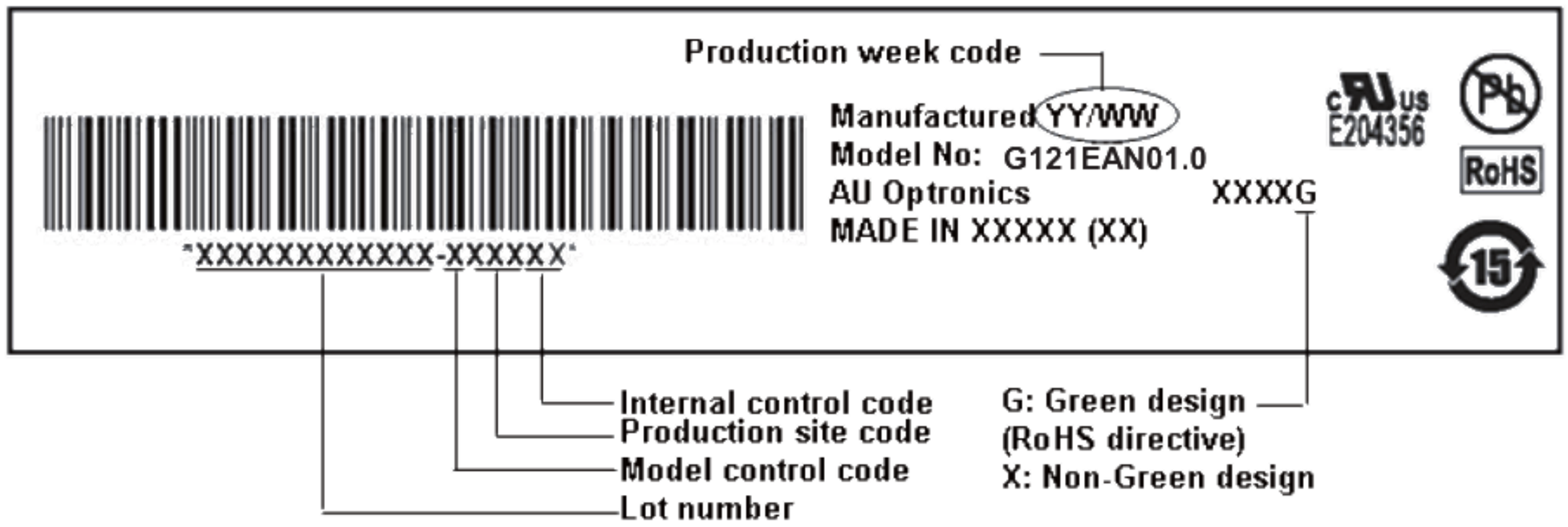

9.2 Carton Package

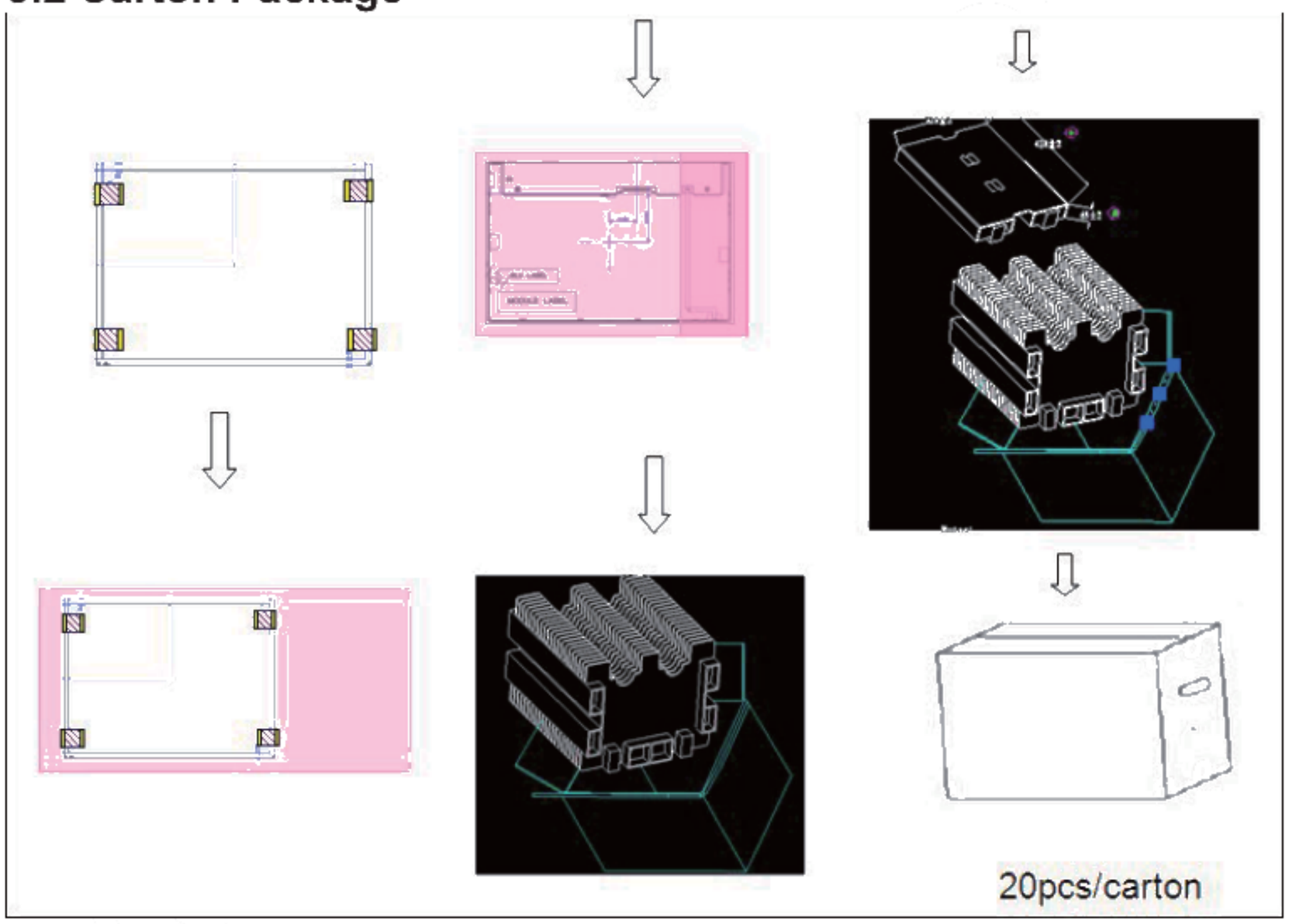

Max capacity：20 TFT-LCD module per carton
Max weight: 15.5 kg per carton
Outside dimension of carton: 450 (L)* 375 (W)* 320 (H)mm
Pallet size：1150 mm* 910 mm* 135mm
One Pallet：4 Layers by boxes.
Module by air：(2 *3) *4 layers，one pallet put 24 boxes，total 480pcs module
Module by sea：One pallet (2 *3) *4 layers + One pallet (2 *3) *1 layers，total 600pcs module
Module by sea_ HQ : One pallet (2 *3) *4 layers + One pallet (2 *3) *2 layers，Total 720pcs module

10 Safety

10.1 Sharp Edge Requirements

There will be no sharp edges or comers on the display assembly that could cause injury.

10.2 Materials

10.2.1 Toxicity

There will be no carcinogenic materials used anywhere in the display module. If toxic materials are used, they will be reviewed and approved by the responsible AUO toxicologist.

10.2.2 Flammability

All components including electrical components that do not meet the flammability grade UL94-V1 in the module will complete the flammability rating exception approval process.

The printed circuit board will be made from material rated 94-V1 or better. The actual UL flammability rating will be printed on the printed circuit board.

10.3 Capacitors

If any polarized capacitors are used in the display assembly, provisions will be made to keep them from being inserted backwards.

10.4 National Test Lab Requirement

The display module will satisfy all requirements for compliance to:

UL 1950, First Edition	U.S.A. Information Technology Equipment

AUO Confidential