() Preliminary Specifications
(V) Final Specifications

Module	15 Inch Color TFT-LCD
Model Name	G150XAN01.2

Customer	**Date**
Checked & Approved by	

Approved by	**Date**
Sean Lin	2018/11/14
Prepared by	
Jason Hsieh	2018/11/14

General Display Business Unit /
AU Optronics corporation

Contents

1. Operating Precautions 4
2.1 Display Characteristics 5
2.2 Optical Characteristics 6
3. Functional Block Diagram 9
4. Absolute Maximum Ratings 10
4.1 Absolute Ratings of TFT LCD Module 10
4.2 Absolute Ratings of Environment 10
5.1 TFT LCD Module 11
5.2 Backlight Unit 13
6. Signal Characteristic 14
6.1 Pixel Format Image 14
6.2 Scanning Direction 14
6.3 Signal Description 15
6.4 The Input Data Format 16
6.5 Interface Timing 17
6.6 Power ON/OFF Sequence 18
7. Connector & Pin Assignment 20
7.1 TFT LCD Module: LVDS Connector 20
8. Reliability Test Criteria 21
8. Reliability Test Criteria 21
9. Mechanical Characteristics 22
9.1 LCM Outline Dimension (Front View) 22
9.2 LCM Outline Dimension (Rear View) 23
10. Label and Packaging 24
10.1 Shipping Label (on the rear side of TFT-LCD display) 24
10.2 Carton Package 24
10.3 Palletizing 25
11.1 Sharp Edge Requirements 26
11.2 Materials 26
11.3 Capacitors 26
11.4 National Test Lab Requirement 26

Record of Revision

Version and Date	Page	Old description	New Description
0.0 2018/05/31	All	First Edition	
1.0 2018/11/14	6	2.2 Optical Characteristics Contrast Ratio : 400 (Min.)/1000(Typ.)	2.2 Optical Characteristics Contrast Ratio : 800 (Min.)/1000(Typ.)
	22	9.1 LCM Outline Dimension	9.1 LCM Outline Dimension (Update side view)
	24	10.2 Carton Package : 20pcs/Carton	10.2 Carton Package : 18pcs/Carton
	25	10.3 Palletizing Module by air_Max:total 480pcs Module by sea_Max: 600pcs Module by sea_HQ_Max: 720pcs	10.3 Palletizing Module by air_Max:total 432pcs Module by sea_Max: 540pcs Module by sea_HQ_Max: 648pcs

INTERNAL USE ONLY

1. Operating Precautions

1) Since front polarizer is easily damaged, please be cautious and not to scratch it.
2) Be sure to turn off power supply when inserting or disconnecting from input connector.
3) Wipe off water drop immediately. Long contact with water may cause discoloration or spots.
4) When the panel surface is soiled, wipe it with absorbent cotton or soft cloth.
5) Since the panel is made of glass, it may be broken or cracked if dropped or bumped on hard surface.
6) Since CMOS LSI is used in this module, take care of static electricity and insure human earth when handling.
7) Do not open nor modify the module assembly.
8) Do not press the reflector sheet at the back of the module to any direction.
9) In case if a module has to be put back into the packing container slot after it was taken out from the container, do not press the center of the LED Reflector edge. Instead, press at the far ends of the LED Reflector edge softly. Otherwise the TFT Module may be damaged.
10) At the insertion or removal of the Signal Interface Connector, be sure not to rotate nor tilt the Interface Connector of the TFT Module.
11) TFT-LCD Module is not allowed to be twisted & bent even force is added on module in a very short time. Please design your display product well to avoid external force applying to module by end-user directly.
12) Small amount of materials without flammability grade are used in the TFT-LCD module. The TFT-LCD module should be supplied by power complied with requirements of Limited Power Source (IEC60950-1 or UL60950-1), or be applied exemption.
13) Severe temperature condition may result in different luminance, response time.
14) Continuous operating TFT-LCD Module under high temperature environment may accelerate LED light bar exhaustion and reduce luminance dramatically.
15) The data on this specification sheet is applicable when TFT-LCD module is placed in landscape position.
16) Continuous displaying fixed pattern may induce image sticking. It's recommended to use screen saver or moving content periodically if fixed pattern is displayed on the screen.

2. General Description

G150XAN01.2 is a Color Active Matrix Liquid Crystal Display composed of a TFT-LCD display, a driver circuit, and a backlight system. The screen format is intended to support XGA (1024(H) x 768(V)) screen and 16.2M (RGB 6+2FRC) colors. All input signals are LVDS interface compatible.

G150XAN01.2 is designed for industrial display applications.

2.1 Display Characteristics

The following items are characteristics summary on the table under 25 ℃condition:

Items	Unit	Specifications
Screen Diagonal	[inch]	15
Active Area	[mm]	304.128(H) x 228.096(V)
Pixels H x V		1024x3(RGB) x 768
Pixel Pitch	[mm]	0.297 x 0.297
Pixel Arrangement		R.G.B. Vertical Stripe
Display Mode		AHVA
Nominal Input Voltage VDD	[Volt]	3.3 typ.
Typical Power Consumption	[Watt]	9.2 W
Weight	[Grams]	660g (max.)
Physical Size	[mm]	326.5(H) x 253.5(V) x 6.8 (D, max)
Electrical Interface		LVDS
Surface Treatment		Anti-glare, Hardness 3H
Support Color		16.2M colors
Temperature Range Operating Storage (Non-Operating)	 [°C] [°C]	 -20 to +70 (+70 °C as panel surface temperature) -20 to +70
RoHS Compliance		RoHS Compliance
Light Bar Unit		LED, Non-Replaceable

2.2 Optical Characteristics

The optical characteristics are measured under stable conditions at 25℃ (Room Temperature):

Item	Unit	Conditions	Min.	Typ.	Max.	Note
White Luminance	[cd/m2]		400	500	-	1
Uniformity	%	9 Points	75	80	-	1, 2, 3
Contrast Ratio			800	1000	-	4
Cross talk	%		-	--	1.5	5
Response Time	[msec]	Rising	-			6
	[msec]	Falling	-			
	[msec]	Raising + Falling	-	25	30	
Viewing Angle	[degree]	Horizontal (Right) CR = 10	80	89	-	7
	[degree]	(Left)	80	89	-	
	[degree]	Vertical (Upper) CR = 10	80	89	-	
	[degree]	(Lower)	80	89	-	
Color / Chromaticity Coordinates (CIE 1931)		Red x	0.569	0.619	0.669	
		Red y	0.302	0.352	0.402	
		Green x	0.279	0.329	0.379	
		Green y	0.559	0.609	0.659	
		Blue x	0.100	0.150	0.200	
		Blue y	0.068	0.118	0.168	
		White x	0.263	0.313	0.363	
		White y	0.279	0.329	0.379	
Color Gamut	%			60	-	

Note 1: Measurement method

Equipment Pattern Generator, Power Supply, Digital Voltmeter, Luminance meter (SR_3 or equivalent)

Aperture 1◦ with 50cm viewing distance

Test Point Center

Environment *< 1 lux*

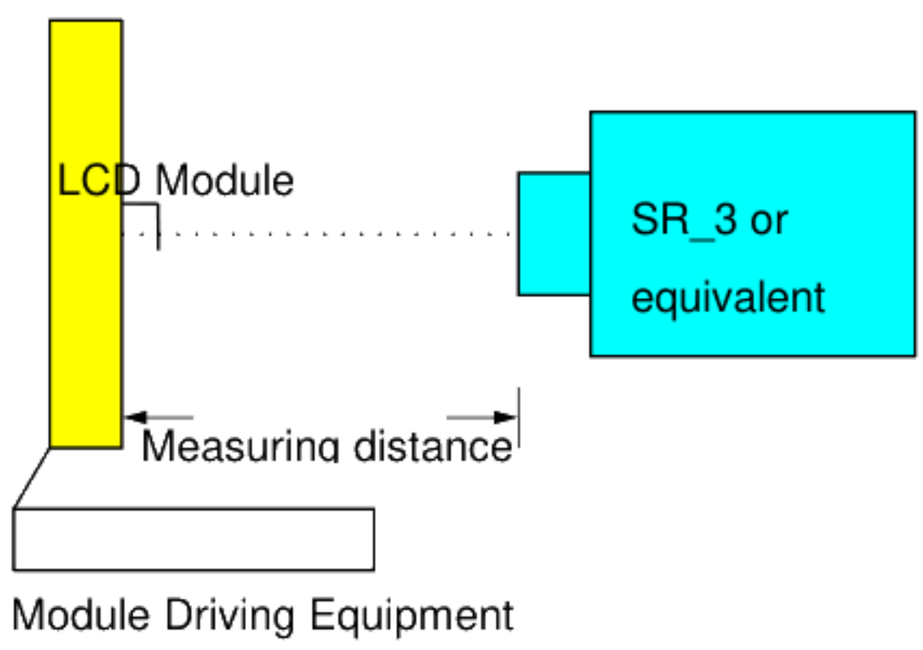

Note 2: Definition of 9 points position (Display active area: 304.128(H) x 228.096(V))

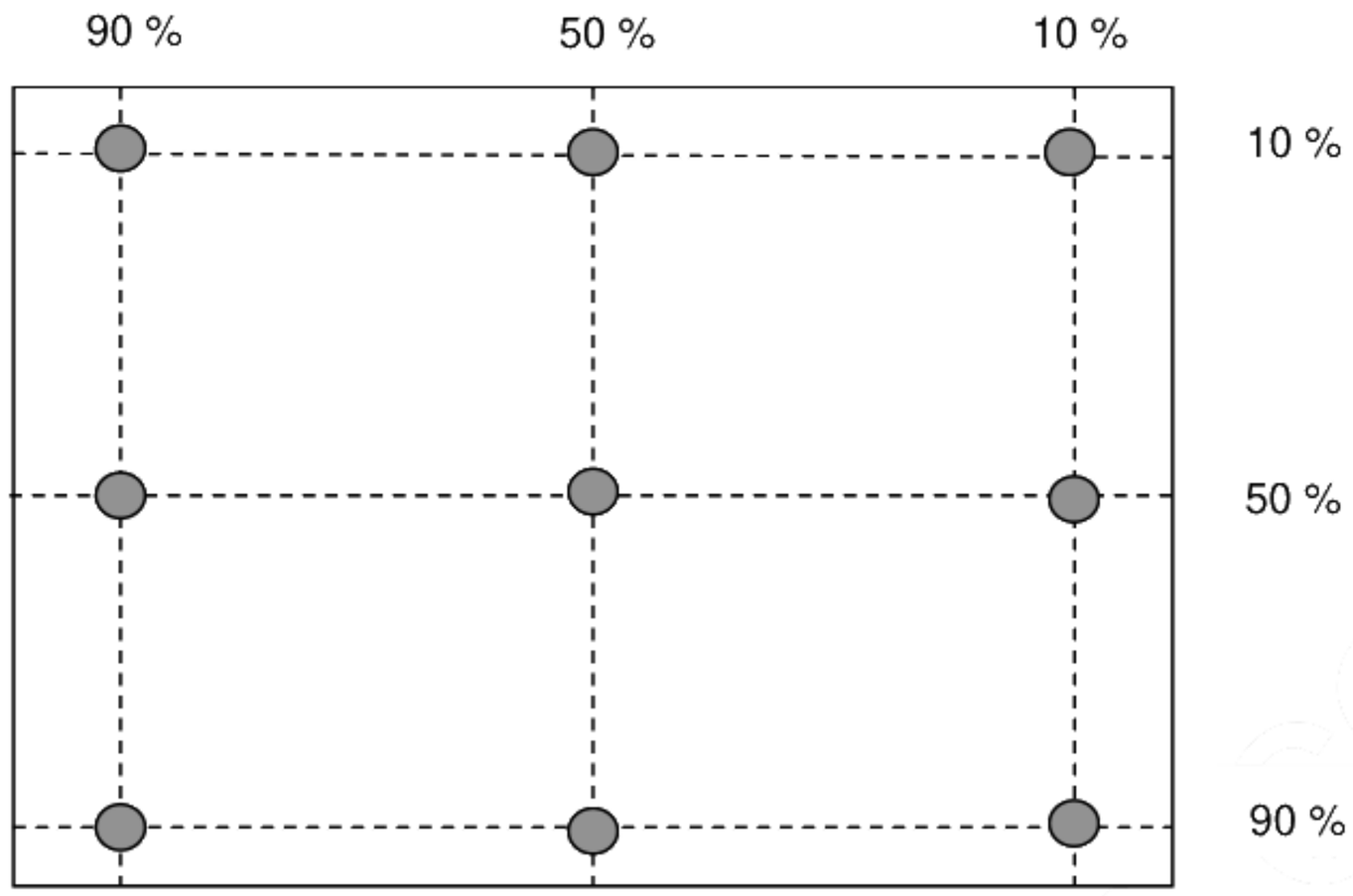

Note 3: The luminance uniformity of 9 points is defined by dividing the minimum luminance values by the maximum test point luminance

$$\delta_{W9} = \frac{\text{Minimum Brightness of nine points}}{\text{Maximum Brightness of nine points}}$$

Note 4： Definition of contrast ratio (CR):

$$\text{Contrast ratio (CR)} = \frac{\text{Brightness on the “White” state}}{\text{Brightness on the “Black” state}}$$

Note 5： Definition of cross talk (CT)

CT = | YB – YA | / YA × 100 (%)
Where
YA = Luminance of measured location without gray level 0 pattern (cd/m2)
YB = Luminance of measured location with gray level 0 pattern (cd/m2)

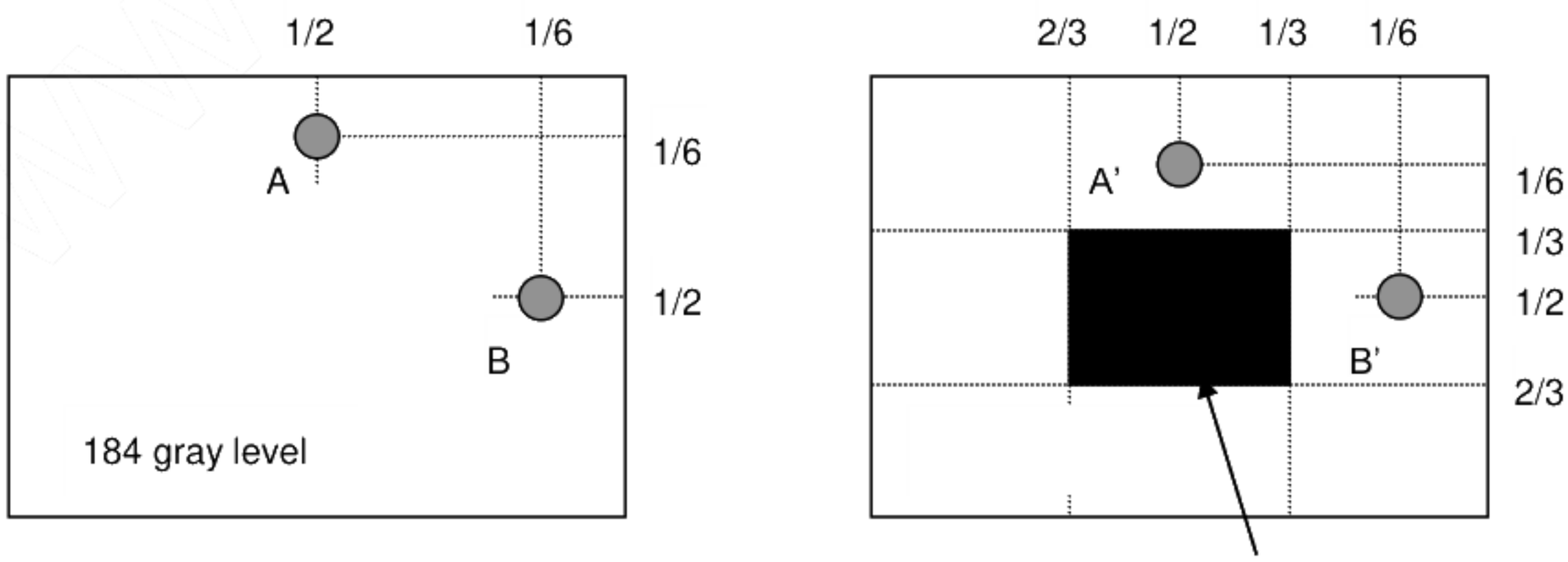

Note 6: Definition of response time:

The output signals of photo detector are measured when the input signals are changed from “White” to “Black” (falling time) and from “Black” to “White” (rising time), respectively. The response time interval is between 10% and 90% of amplitudes. Please refer to the figure as below.

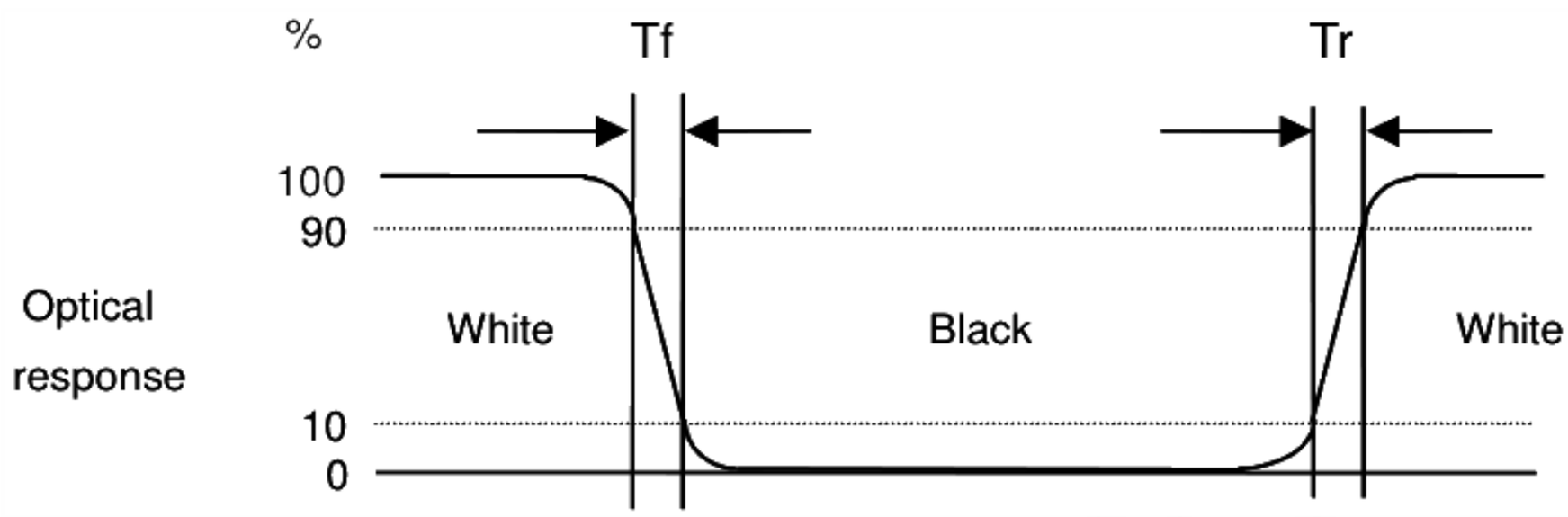

Note 7: Definition of viewing angle

Viewing angle is the measurement of contrast ratio ≧10, at the screen center, over a 180° horizontal and 180° vertical range (off-normal viewing angles). The 180° viewing angle range is broken down as below: 90° (θ) horizontal left and right, and 90° (Φ) vertical high (up) and low (down). The measurement direction is typically perpendicular to the display surface with the screen rotated to its center to develop the desired measurement viewing angle.

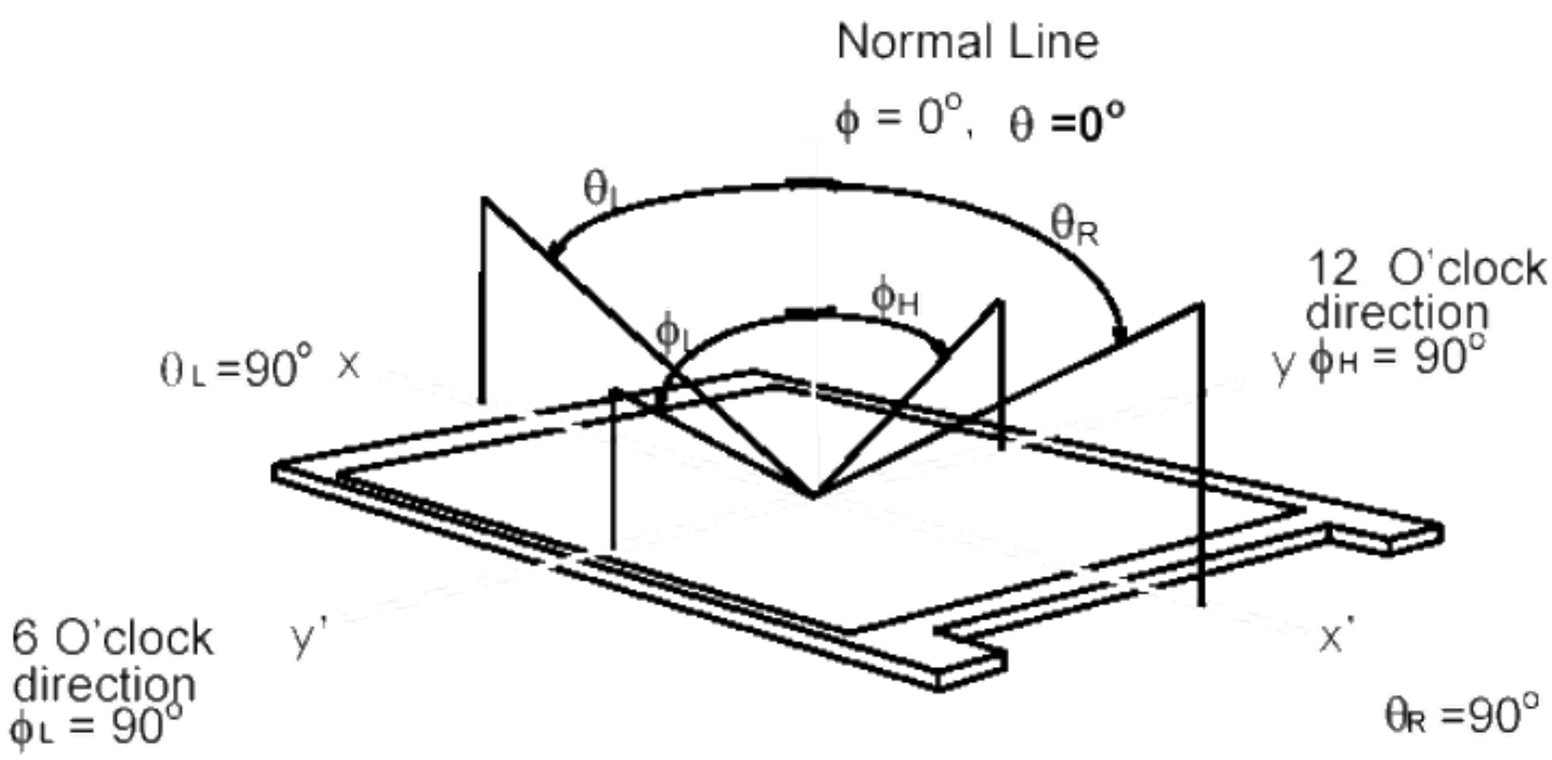

3. Functional Block Diagram

The following diagram shows the functional block of the 15 inch color TFT/LCD module:

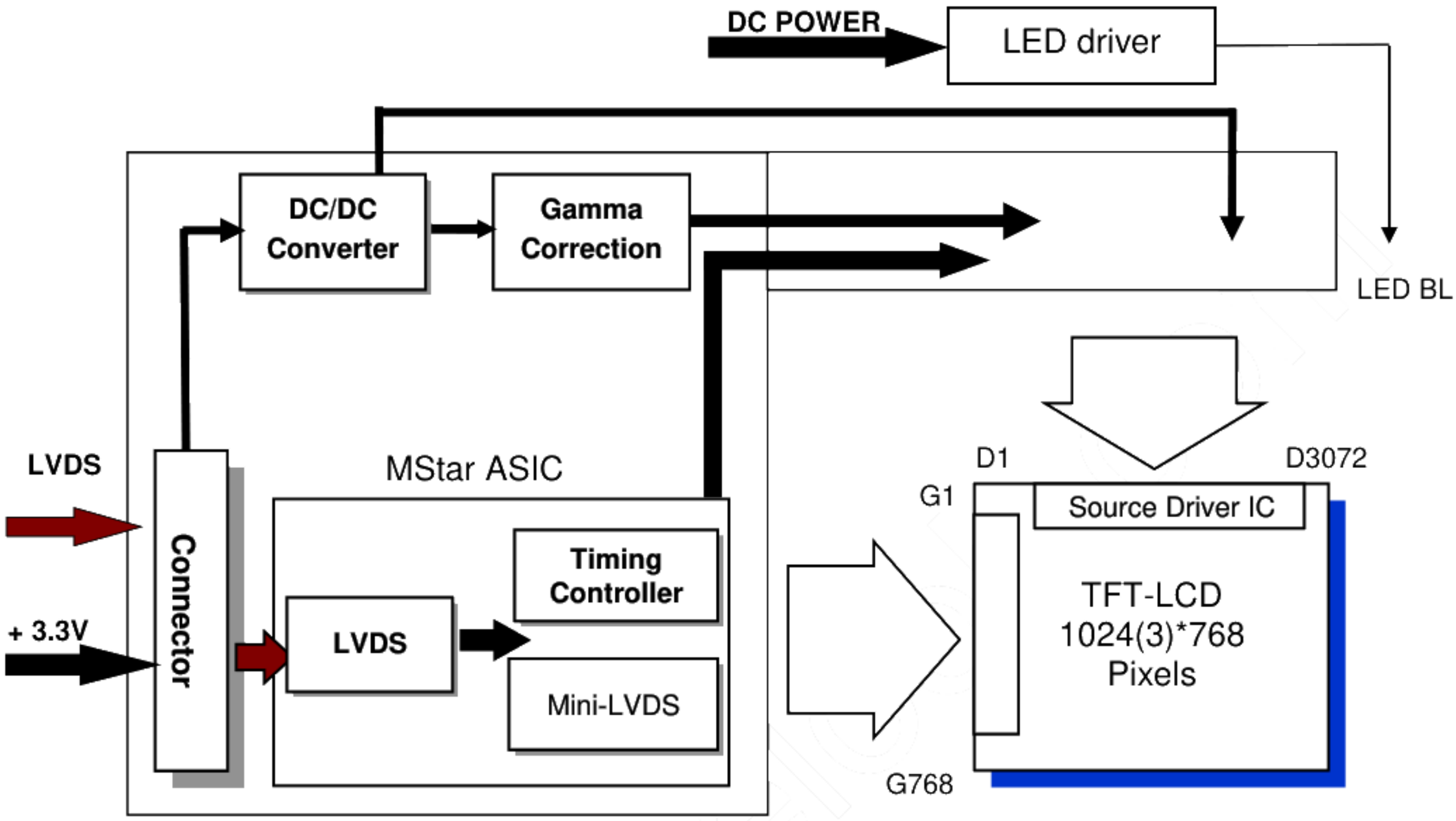

MSCK2407P30

Mating Type: P2407P30

4. Absolute Maximum Ratings

4.1 Absolute Ratings of TFT LCD Module

Item	Symbol	Min	Max	Unit
Logic/LCD Drive Voltage	Vin	-0.3	+3.6	[Volt]

4.2 Absolute Ratings of Environment

Item	Symbol	Min	Max	Unit
Operating Temperature	TOP	-20	+70*	[°C]
Operation Humidity	HOP	8	90	[%RH]
Storage Temperature	TST	-20	+70	[°C]
Storage Humidity	HST	8	90	[%RH]

Note: Maximum Wet-Bulb should be 39°C and no condensation.

* 70°C is panel surface temperature

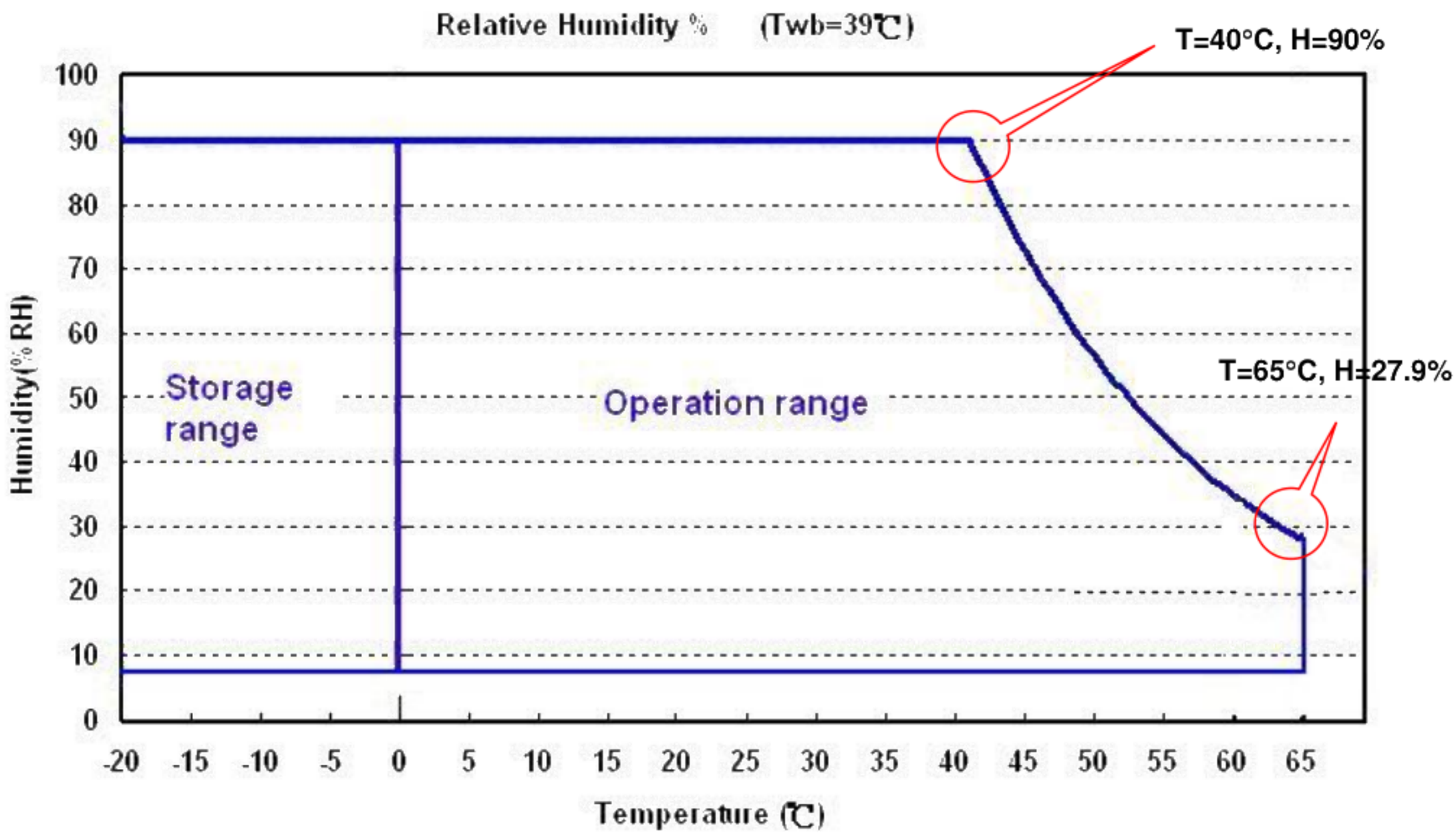

5. Electrical Characteristics

5.1 TFT LCD Module

5.1.1 Power Specification

Symbol	Parameter	Min	Typ	Max	Units	Remark
VDD	Logic/LCD Drive Voltage	3.0	3.3	3.6	[Volt]	±10%
IDD	VDD Current	-	0.42	0.51	[A]	All White Pattern (VDD=3.3V, at 60Hz)
Irush	LCD Inrush Current			3	[A]	Note 1
PDD	VDD Power	-	1.39	1.68	[Watt]	All White Pattern (VDD=3.3V, at 60Hz)

Note 1: Measurement condition:

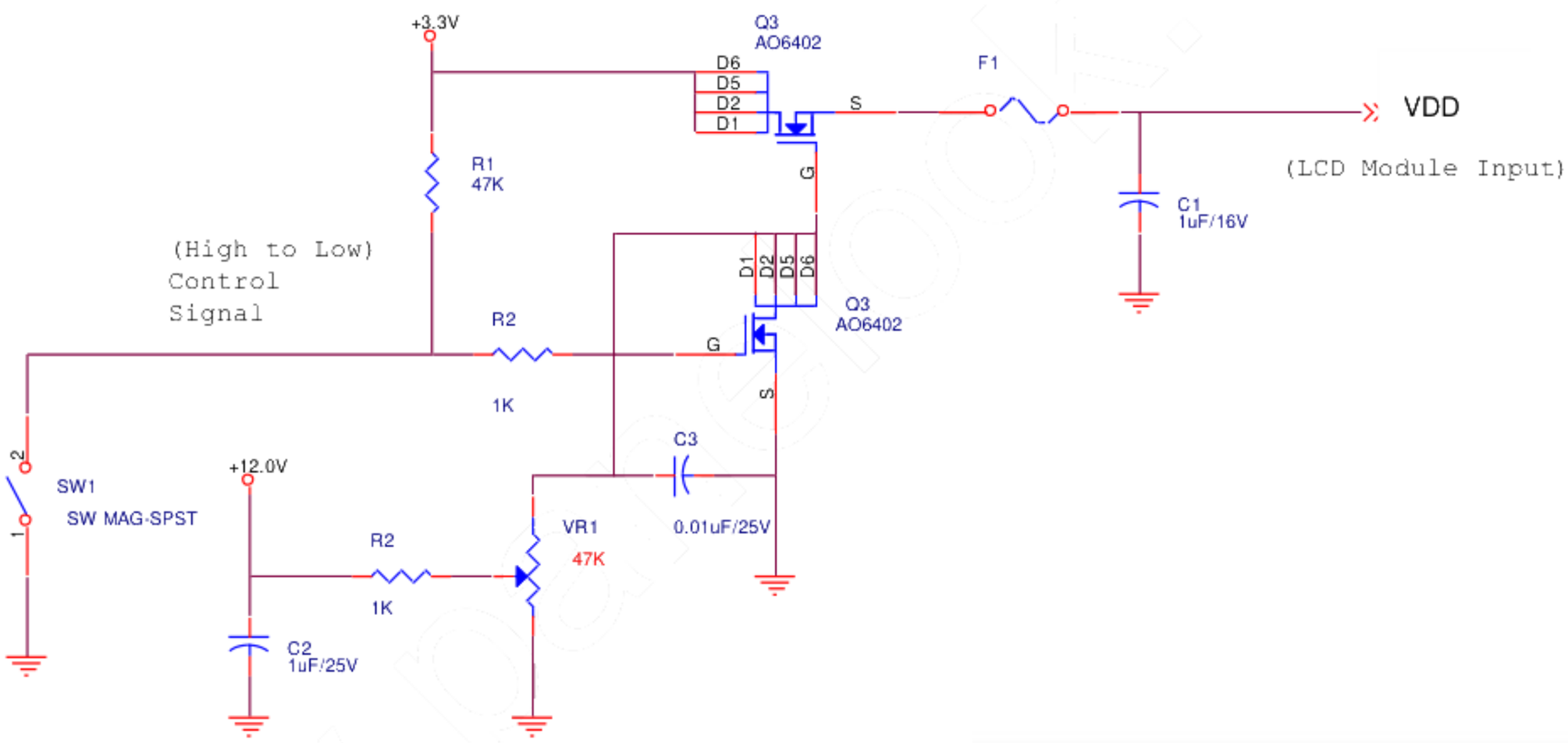

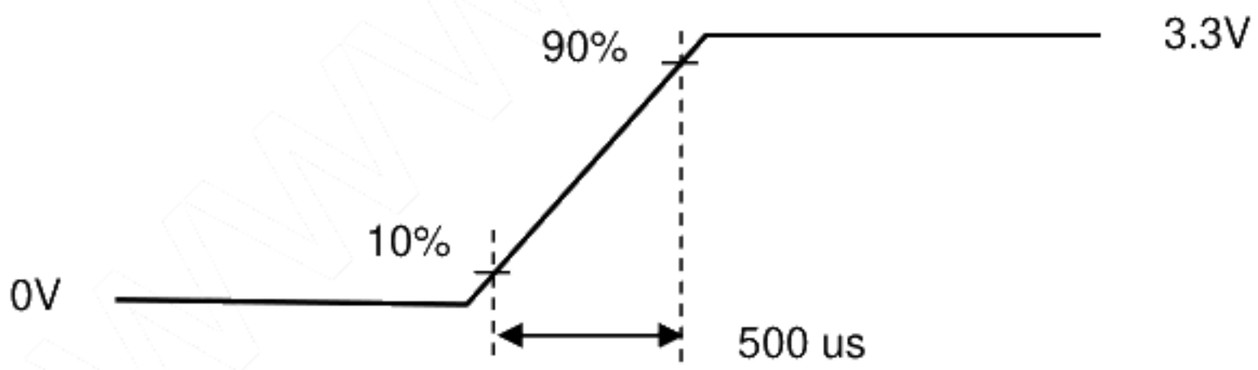

VDD rising time

64 Gray pattern

5.1.2 Signal Electrical Characteristics

Input signals shall be low or Hi-Z state when VDD is off.

Symbol	Item	Min.	Typ.	Max.	Unit	Remark
VTH	Differential Input High Threshold	-	-	100	[mV]	VCM=1.2V
VTL	Differential Input Low Threshold	-100	-	-	[mV]	VCM=1.2V
| VID |	Input Differential Voltage	100		600	[mV]	
VICM	Differential Input Common Mode Voltage	1.0	1.2	1.5	[V]	VTH/VTL=±100mV

Note: LVDS Signal Waveform.

VP-VN =|VID|>VTH="High"
VP-VN =-|VID|<VTL="Low"

Single-end Signal

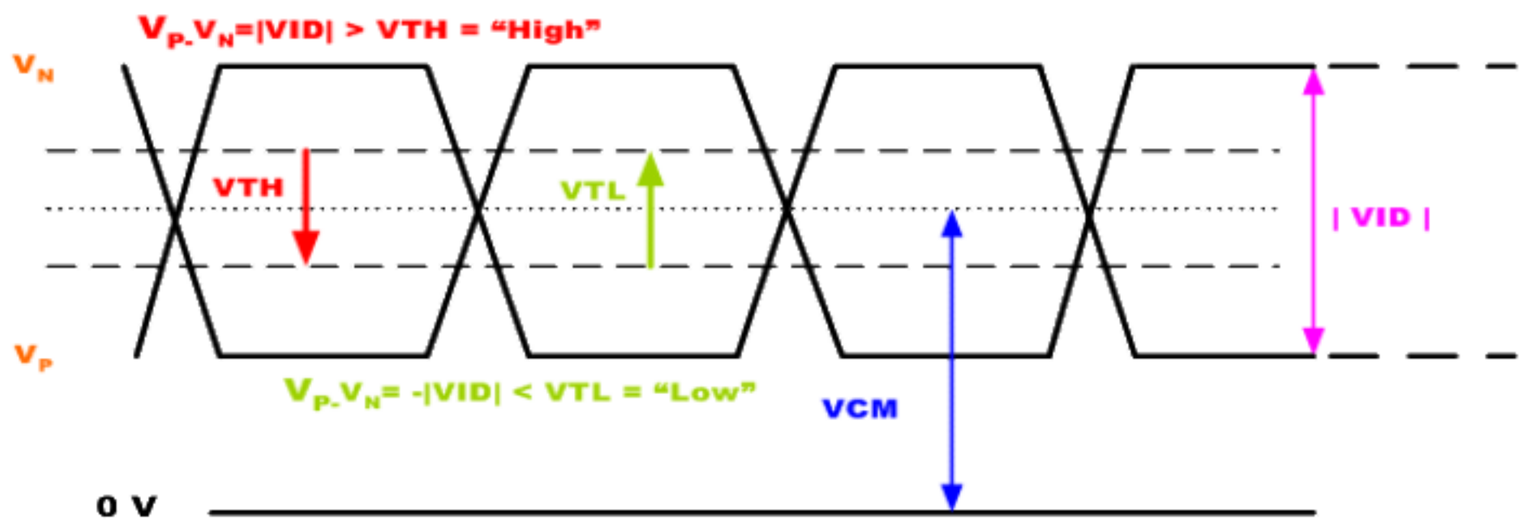

Differential Signal

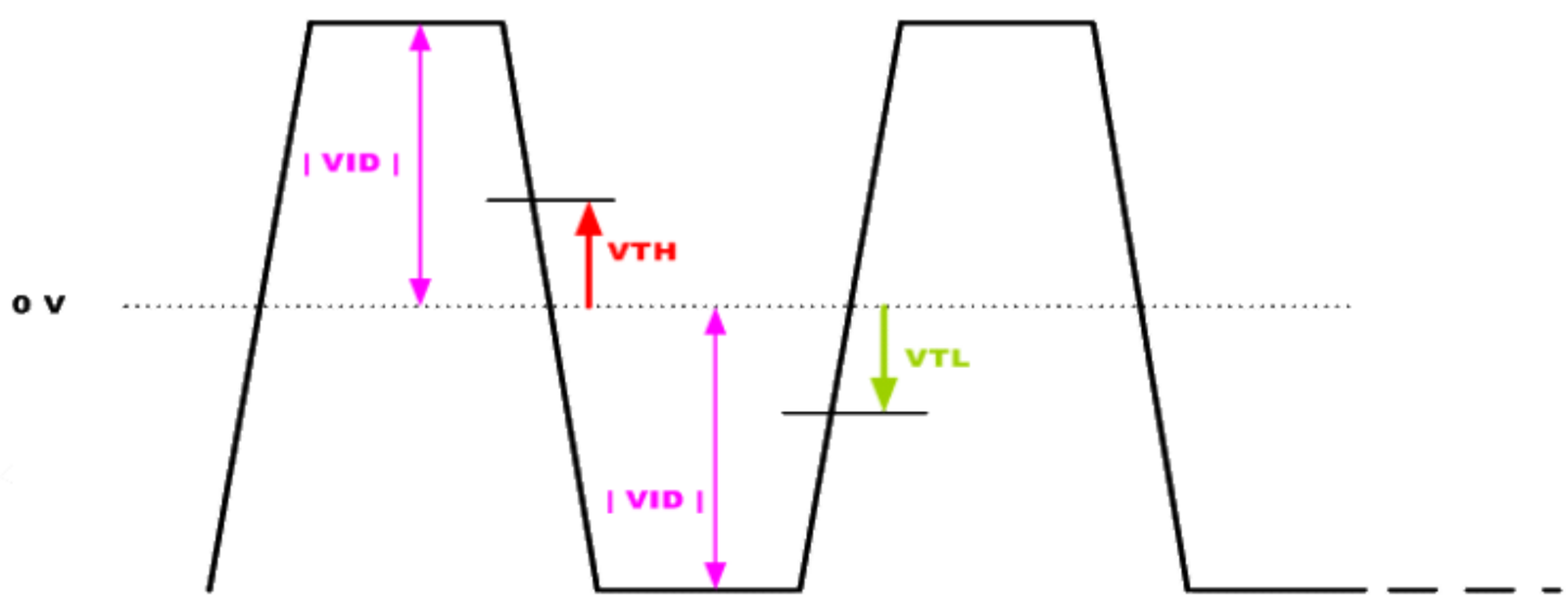

5.2 Backlight Unit

5.2.1 Parameter guideline for LED

Following characteristics are measured under stable condition using a LED driving board at 25℃(Room Temperature).

Symbol	Parameter	Min.	Typ.	Max.	Unit	Remark
Vcc	Input Voltage	10.8	12	13.2	Volt	
Ivcc	Input Current	-	0.65	0.71	A	100% Dimming
P_{LED}	Power Consumption	-	7.75	8.5	Watt	100% Dimming
Irush	Inrush Current			3	A	
$V_{LED\ on/off}$	On Control Voltage	2.5	3.3	5.5	Volt	
	Off Control Voltage			0.5	Volt	
F_{PWM}	PWM Dimming Frequency	200		20k	Hz	
	High Voltage	2.5	3.3	5.5	Volt	
	Low Voltage			0.5	Volt	
	Dimming Duty Cycle	5	-	100	%	
I_F	LED Forward Current		50		mA	Ta = 25°C
Operating Life		50,000			Hrs	Ta = 25°C

Note 1: Ta means ambient temperature of TFT-LCD module.

Note 2: If G150XAN01.2 module is driven at high ambient temperature & humidity condition. The operating life will be reduced.

Note 3: Definition of life time: LED brightness becomes 50% of its original value. The minimum life time of LED unit is defined at the condition of IR_{LED} = 60 mA and 25±2℃(Room temperature).

6. Signal Characteristic

6.1 Pixel Format Image

Following figure shows the relationship between input signal and LCD pixel format.

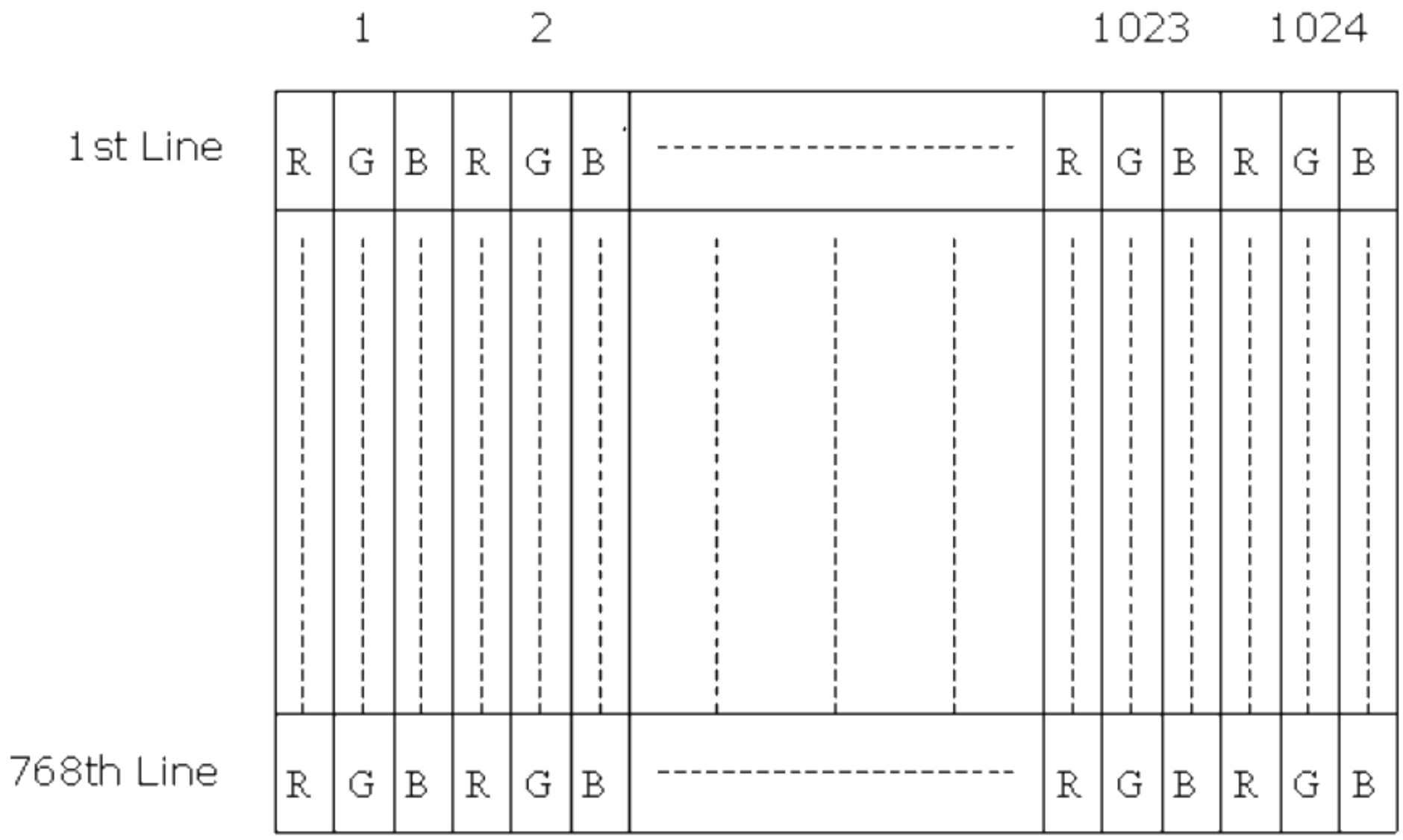

6.2 Scanning Direction

The following figures show the image seen from the front view. The arrow indicates the direction of scan.

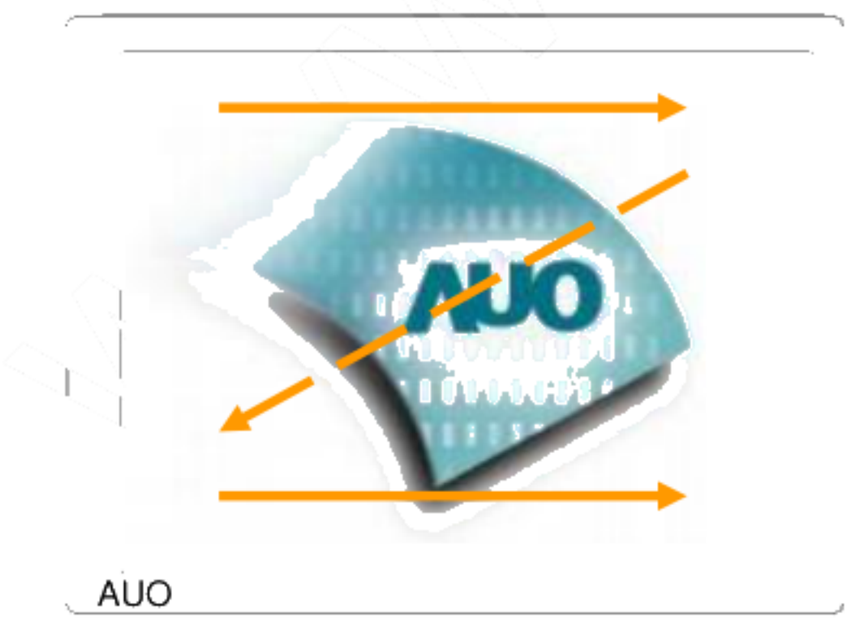

6.3 Signal Description

LVDS is a differential signal technology for LCD interface and high speed data transfer device.

Pin#	Signal Name	Description
1	VDD	Power Supply, 3.3V
2	VDD	Power Supply, 3.3V
3	NC	No connect
4	NC	No connect
5	Rin1-	- LVDS differential data input
6	Rin1+	+ LVDS differential data input
7	VSS	Ground
8	Rin2-	- LVDS differential data input
9	Rin2+	+ LVDS differential data input
10	VSS	Ground
11	Rin3-	- LVDS differential data input
12	Rin3+	+ LVDS differential data input
13	VSS	Ground
14	ClkIN-	- LVDS differential clock input
15	ClkIN+	+ LVDS differential clock input
16	VSS	Ground
17	Rin4-	- LVDS differential data input
18	Rin4+	- LVDS differential data input
19	VSS	Ground
20	NC	No connect
21	NC	No connect
22	BL EN	3.3V
23	BL DIM	3.3V (PWM Signal : 200~20KHz)
24	BL GND	Ground
25	BL GND	Ground
26	BL PWR	12V
27	BL PWR	12V
28	BL PWR	12V
29	BL PWR	12V
30	BL GND	Ground

6.4 The Input Data Format

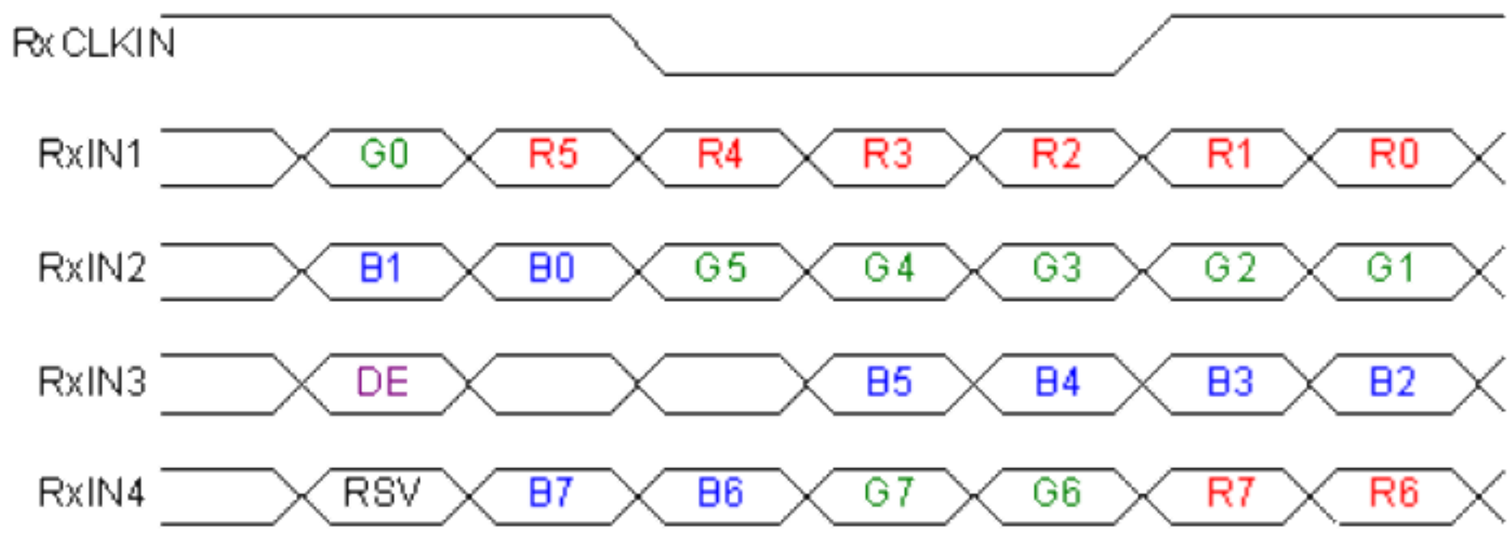

Note1: Please follow PSWG.
Note2: R/G/B data 7:MSB, R/G/B data 0:LSB

Signal Name	Description	Remark
R7 R6 R5 R4 R3 R2 R1 R0	Red Data 7 Red Data 6 Red Data 5 Red Data 4 Red Data 3 Red Data 2 Red Data 1 Red Data 0	Red-pixel Data For 8Bits LVDS input MSB: R7 ; LSB: R0
G7 G6 G5 G4 G3 G2 G1 G0	Green Data 7 Green Data 6 Green Data 5 Green Data 4 Green Data 3 Green Data 2 Green Data 1 Green Data 0	Green-pixel Data For 8Bits LVDS input MSB: G7 ; LSB: G0
B7 B6 B5 B4 B3 B2 B1 B0	Blue Data 7 Blue Data 6 Blue Data 5 Blue Data 4 Blue Data 3 Blue Data 2 Blue Data 1 Blue Data 0	Blue-pixel Data For 8Bits LVDS input MSB: B7 ; LSB: B0
RxCLKIN	LVDS Data Clock	
DE	Data Enable Signal	When the signal is high, the pixel data shall be valid to be displayed.

Note: Output signals from any system shall be low or Hi-Z state when VDD is off.

6.5 Interface Timing

6.5.1 Timing Characteristics

Signal	Parameter		Symbol	Min.	Typ.	Max.	Unit
Clock Timing	Clock frequency		$1/T_{Clock}$	63	65	67	MHz
Vsync Timing	Vertical Section	Period	T_V	804	806	808	T_{Line}
		Active	T_{VD}	768	768	768	
		Blanking	T_{VB}	36	38	40	
Hsync Timing	Horizontal Section	Period	T_H	1328	1344	1360	T_{Clock}
		Active	T_{HD}	1024	1024	1024	
		Blanking	T_{HB}	304	320	336	
Frame Rate			F	59	60	61	Hz

Note: Support DE mode only.
Note: Typical value refer to VESA STANDARD

6.5.2 Input Timing Diagram

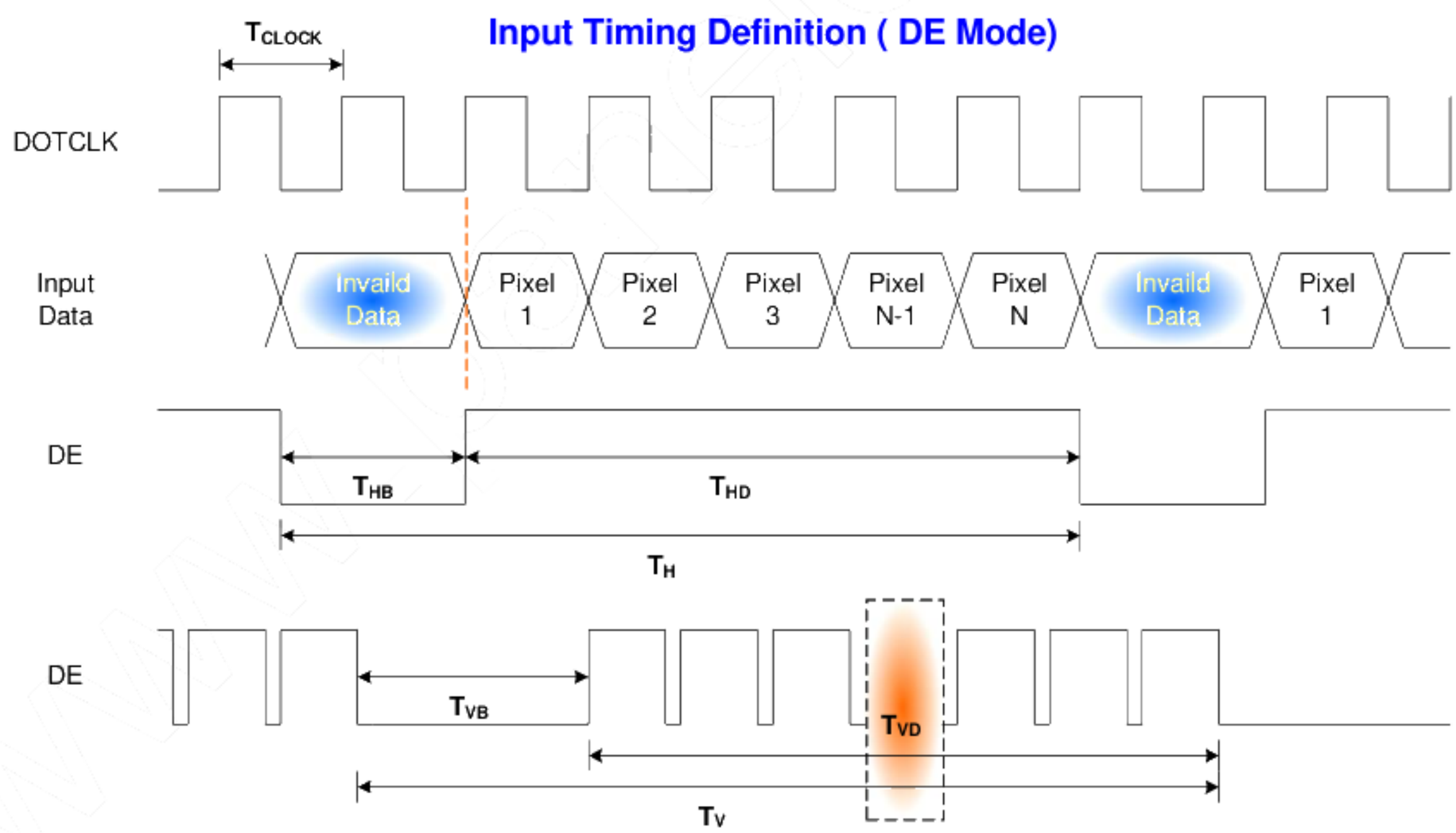

6.6 Power ON/OFF Sequence

VDD power and backlight on/off sequence is as below. Interface signals are also shown in the chart. Signals from any system shall be Hi-Z state or low level when VDD is off.

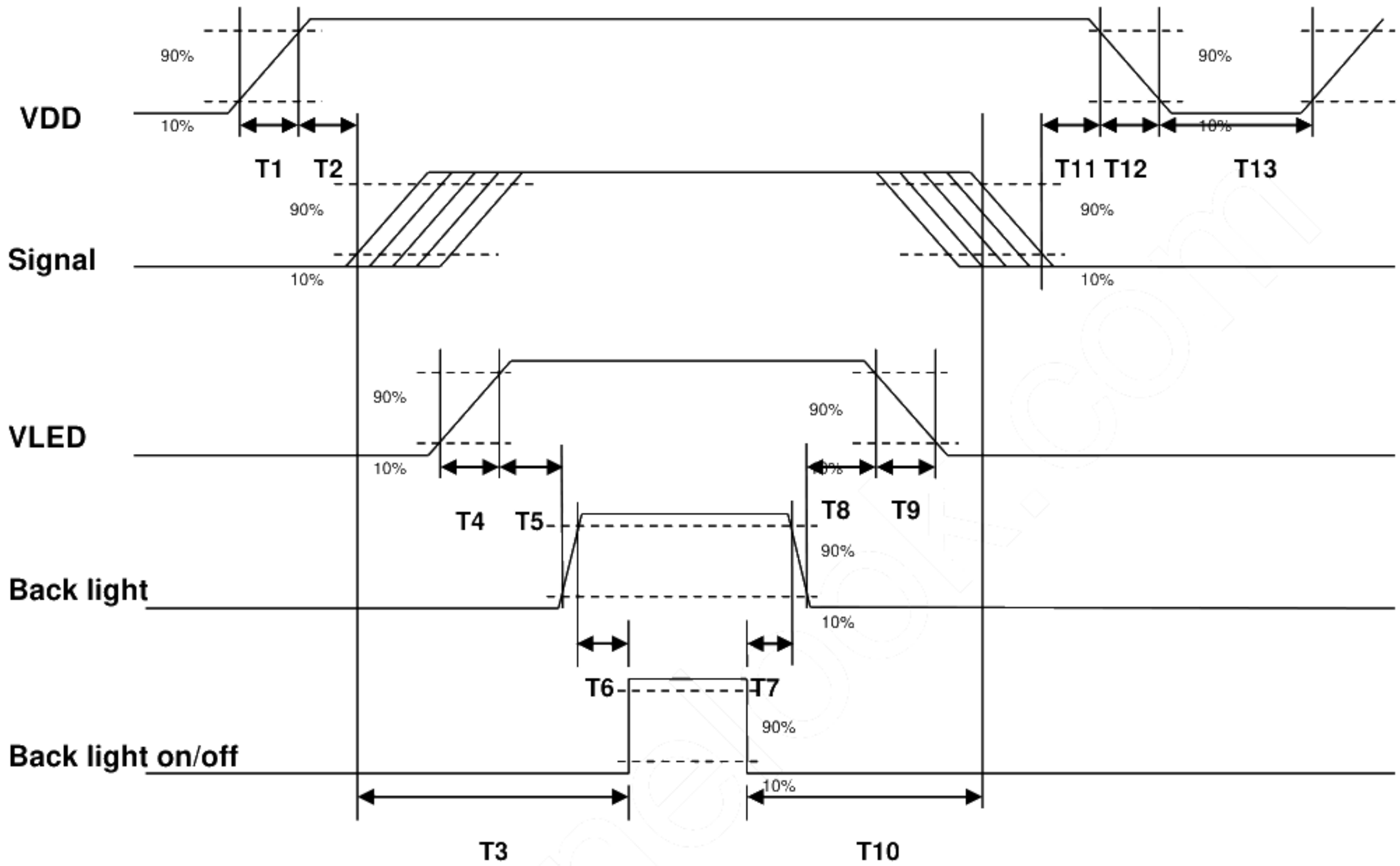

Power Sequence Timing

Parameter	Value			Unit
	Min.	Typ.	Max.	
T1	0.5	-	10	[ms]
T2	30	40	50	[ms]
T3	200	-	-	[ms]
T4	0.5	-	10	[ms]
T5	10	-	-	[ms]
T6	10	-	-	[ms]
T7	0	-	-	[ms]
T8	10	-	-	[ms]
T9	-	-	200	[ms]
T10	110	-	-	[ms]
T11	0	16	50	[ms]
T12	-	-	200	[ms]
T13	1000	-	-	[ms]

The above on/off sequence should be applied to avoid abnormal function in the display. Please make sure to turn off the power when you plug the cable into the input connector or pull the cable out of the connector.

AUO Confidential

7. Connector & Pin Assignment

Physical interface is described as for the connector on module. These connectors are capable of accommodating the following signals and will be following components.

7.1 TFT LCD Module: LVDS Connector

Connector Name / Designation	**Signal Connector**
Manufacturer	STM or compatible
Connector Model Number	MSCK2407P30
Mating Housing Part Number	P2407P30

Pin#	**Signal Name**	**Pin#**	**Signal Name**
1	VDD	16	VSS
2	VDD	17	Rin4-
3	NC	18	Rin4+
4	NC	19	VSS
5	Rin1-	20	NC
6	Rin1+	21	NC
7	VSS	22	BL EN
8	Rin2-	23	BL DIM
9	Rin2+	24	BL GND
10	VSS	25	BL GND
11	Rin3-	26	BL PWR
12	Rin3+	27	BL PWR
13	VSS	28	BL PWR
14	ClkIN-	29	BL PWR
15	ClkIN+	30	BL GND

8. Reliability Test Criteria

Items	Required Condition	Note
Temperature Humidity Bias	50°C/80%,300 hours	
High Temperature Operation	70°C,300 hours	
Low Temperature Operation	-20°C,300 hours	
Hot Storage	70°C,300 hours	
Cold Storage	-20°C,300 hours	
Thermal Shock Test	-20°C/30 min ,60°C/30 min ,100cycles	
Shock Test (Non-Operating)	50G,20ms,Half-sine wave,(±X, ±Y, ±Z)	
Vibration Test (Non-Operating)	1.5G, (10~200Hz, P-P) 30 mins/axis (X, Y, Z)	
On/off test	On/10 sec, Off/10 sec, 30,000 cycles	
ESD	Contact Discharge: ± 8KV, 150pF(330Ω) 1sec, 8 points, 25 times/ point Air Discharge: ± 15KV, 150pF(330Ω) 1sec, 8 points, 25 times/ point	Note 1

Note1: According to EN61000-4-2, ESD class B: Some performance degradation allowed. No data lost Self-recoverable. No hardware failures.

Note 2:

- Water condensation is not allowed for each test items.
- Each test is done by new TFT-LCD module. Don't use the same TFT-LCD module repeatedly for reliability test.
- The reliability test is performed only to examine the TFT-LCD module capability.
- To inspect TFT-LCD module after reliability test, please store it at room temperature and room humidity for 24 hours at least in advance.
- No function failure occurs. Mura shall be ignored after high temperature reliability test.

9. Mechanical Characteristics

9.1 LCM Outline Dimension (Front View)

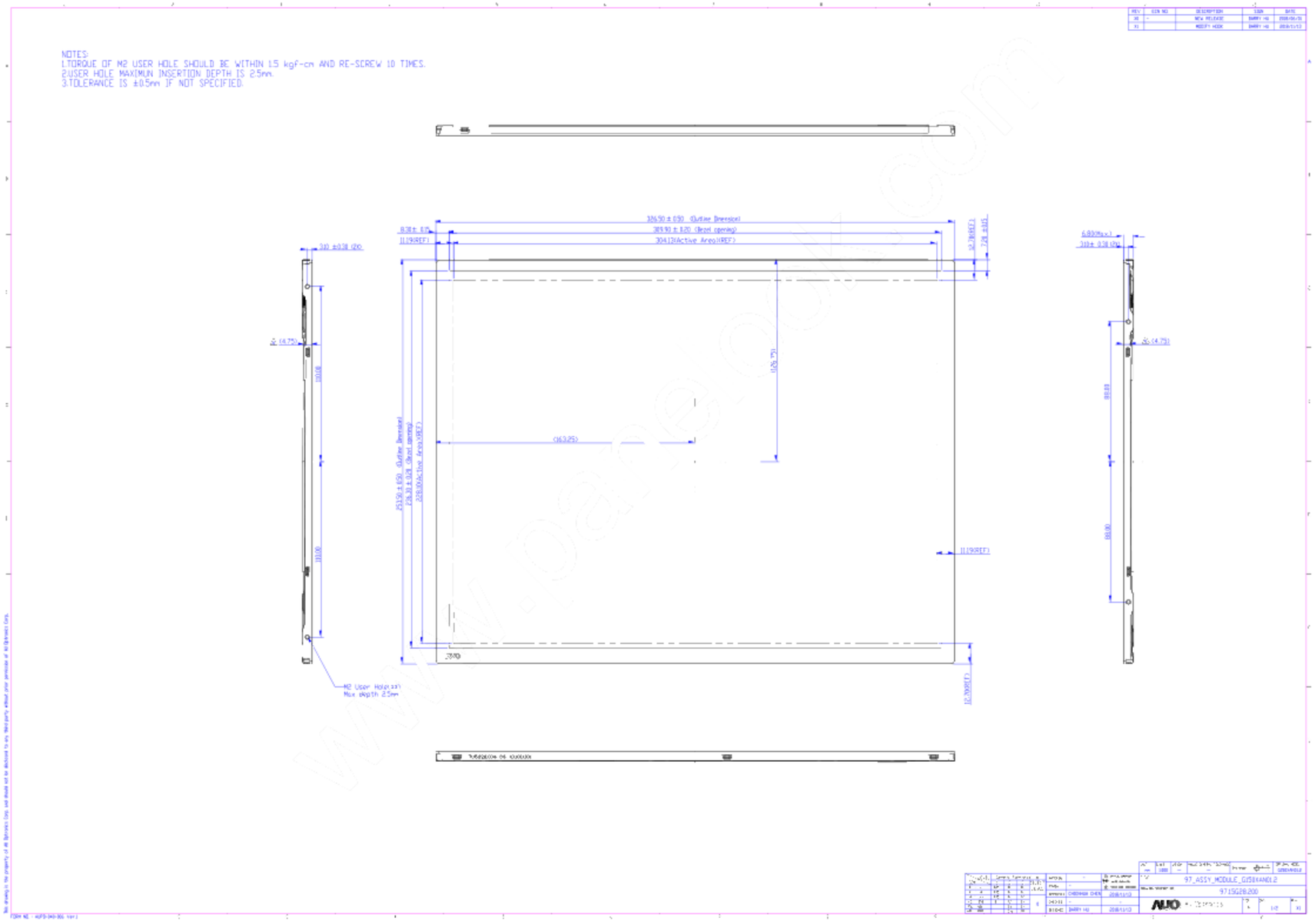

9.2 LCM Outline Dimension (Rear View)

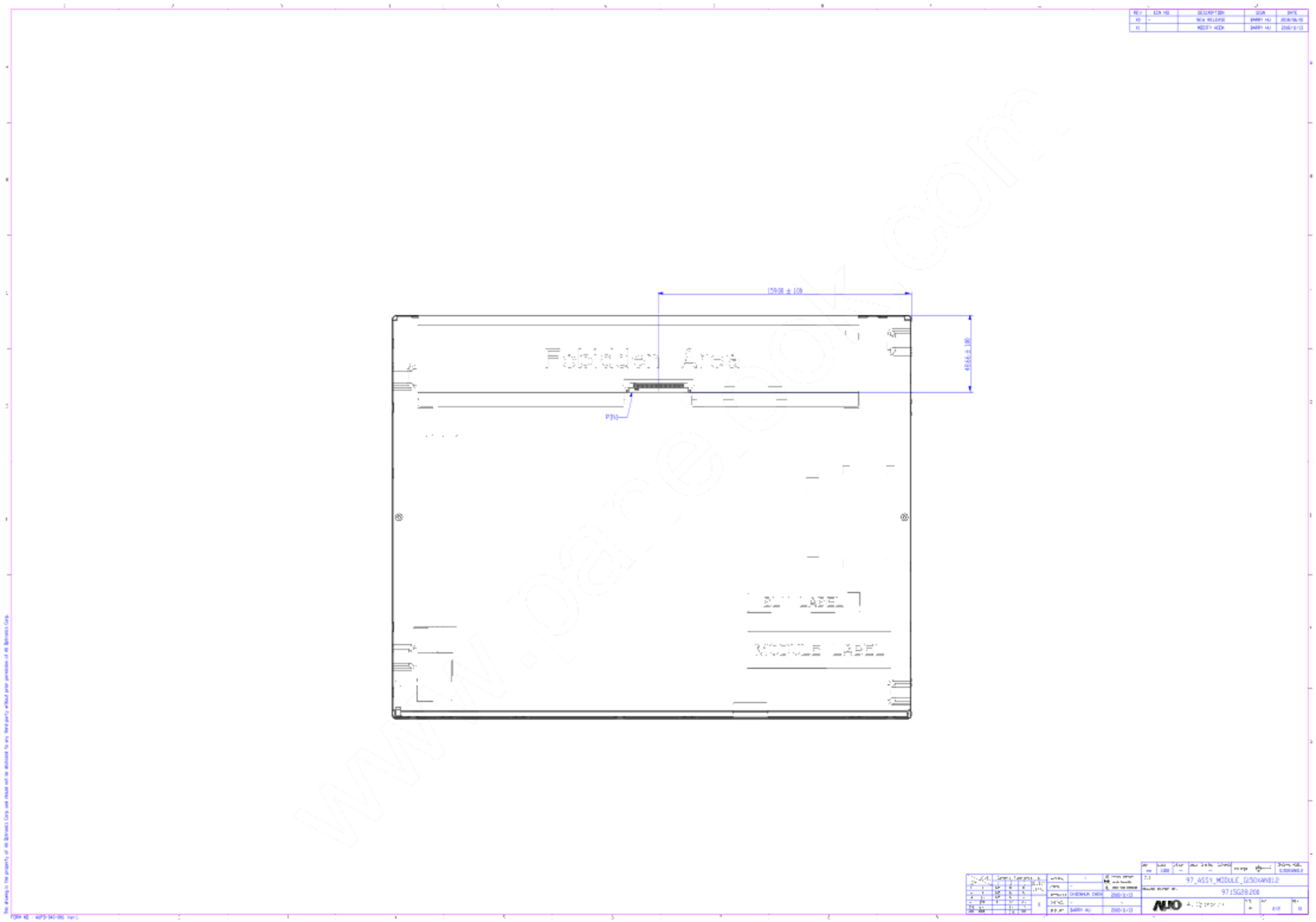

10. Label and Packaging

10.1 Shipping Label (on the rear side of TFT-LCD display)

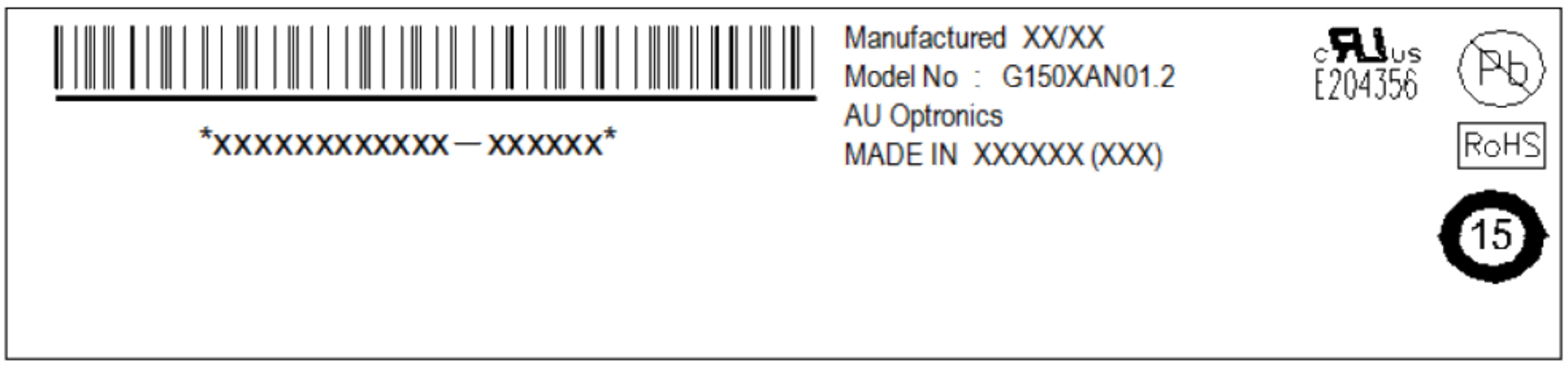

10.2 Carton Package

Max capacity: TFT-LCD module per carton
Max weight: 15 kg per carton
Outside dimension of carton: 413 mm(L)* 366mm(W)*359mm(H)
Pallet size： 1150 mm * 840 mm * 135mm

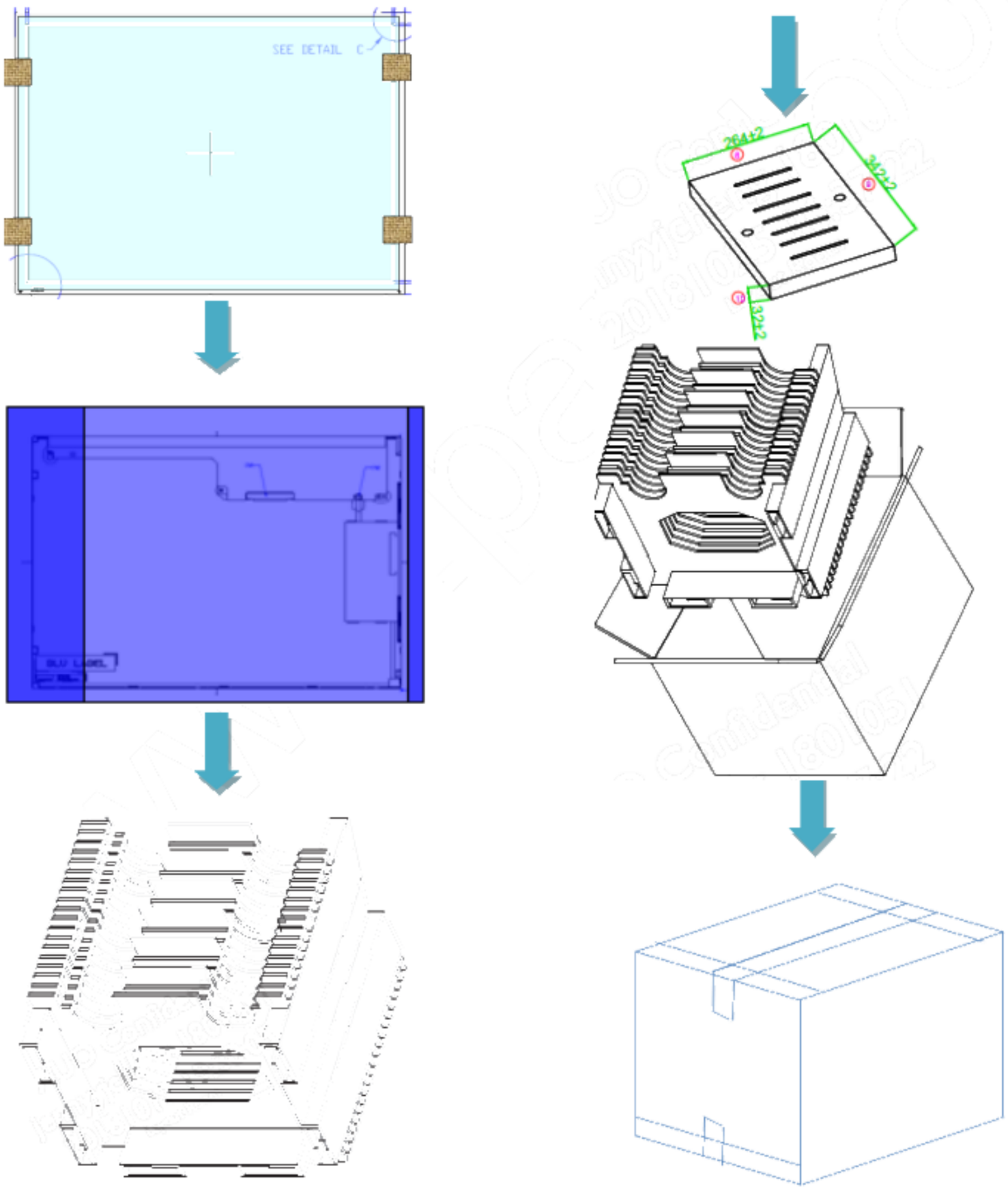

18 pcs /carton

10.3 Palletizing

Module by air_Max: (2 *3) *4 layers，one pallet put 24 boxes，total 432pcs module

Module by sea_Max: (2 *3) *4 layers + (2 *3) *1 layers , two pallet put 30 boxes，total 540 pcs module

Module by sea_HQ_Max: (2 *3) *4 layers+(2 *3) *2 layers, two pallet put 36 boxes, total 648 pcs module

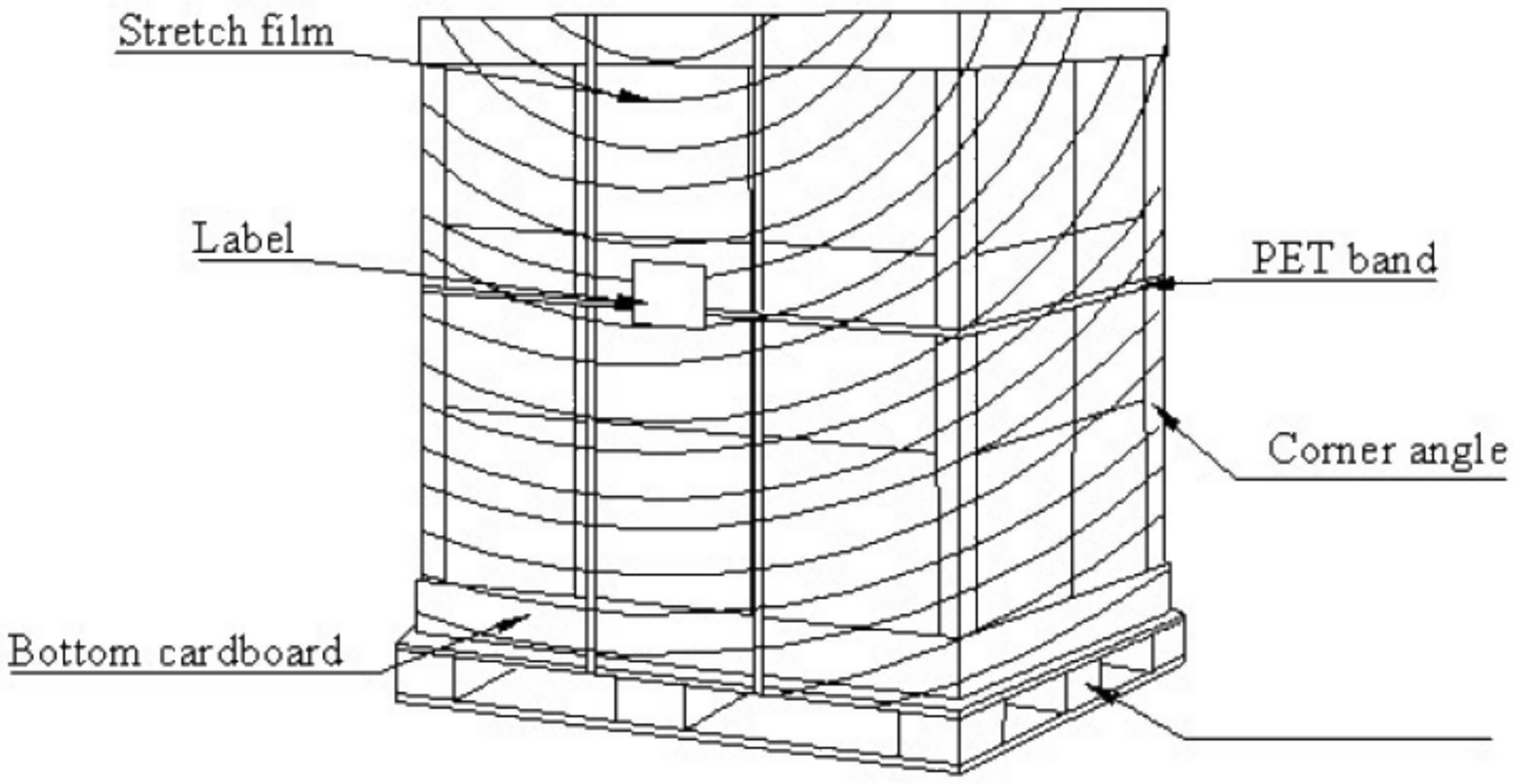

11 Safety

11.1 Sharp Edge Requirements

There will be no sharp edges or comers on the display assembly that could cause injury.

11.2 Materials

11.2.1 Toxicity

There will be no carcinogenic materials used anywhere in the display module. If toxic materials are used, they will be reviewed and approved by the responsible AUO toxicologist.

11.2.2 Flammability

All components including electrical components that do not meet the flammability grade UL94-V1 in the module will complete the flammability rating exception approval process.

The printed circuit board will be made from material rated 94-V1 or better. The actual UL flammability rating will be printed on the printed circuit board.

11.3 Capacitors

If any polarized capacitors are used in the display assembly, provisions will be made to keep them from being inserted backwards.

11.4 National Test Lab Requirement

The display module will satisfy all requirements for compliance to:

UL 60950-1, Second Edition	U.S.A. Information Technology Equipment