Product Specification

G170ETN02.1

AU OPTRONICS CORPORATION

(V) Preliminary Specification
( ) Final Specification

Module	17.0” SXGA Color TFT-LCD Module
Model Name	G170ETN02.1

Customer	**Date**	**Checked & Approved by**	**Date**
_____	_____	*Crystal Hsieh*	*2016/07/28*
Checked & Approved by	**Date**	**Prepared by**	**Date**
_____	_____	*BinJou Huang*	*2016/07/28*
		General Display Business Division / AU Optronics corporation	

Contents

1. Handling Precautions **4**
2. General Description **5**
2.1 Display Characteristics 5
2.2 Optical Characteristics 6
3. Functional Block Diagram **9**
4. Absolute Maximum Ratings **10**
4.1 TFT LCD Module 10
4.2 Backlight Unit 10
4.3 Absolute Ratings of Environment 10
5. Electrical characteristics **11**
5.1 TFT LCD Module 11
6. Signal Characteristic **14**
6.1 Pixel Format Image 14
6.2 The Input Data Format 14
6.3 Signal Description 15
6.4 Timing Characteristics 17
6.5 Power ON/OFF Sequence 18
7. Connector & Pin Assignment **19**
7.1 TFT LCD Module 19
7.2 Backlight Unit 19
8. Reliability Test **21**
9. Label and Packaging **22**
9.1 Shipping Label 22
9.2 Carton Package 22
10. Mechanical Characteristics **23**

Record of Revision

Version and Date	Page	Old description	New Description
0.0 2016/07/28	All	Preliminary Specification	

AUO Confidential

1. Handling Precautions

1) Since front polarizer is easily damaged, pay attention not to scratch it.
2) Be sure to turn off power supply when inserting or disconnecting from input connector.
3) Wipe off water drop immediately. Long contact with water may cause discoloration or spots.
4) When the panel surface is soiled, wipe it with absorbent cotton or other soft cloth.
5) Since the panel is made of glass, it may break or crack if dropped or bumped on hard surface.
6) Since CMOS LSI is used in this module, take care of static electricity and insure human earth when handling.
7) Do not open or modify the Module Assembly.
8) Do not press the reflector sheet at the back of the module to any directions.
9) In case if a Module has to be put back into the packing container slot after once it was taken out from the container, do not press the center of the LED light bar edge. Instead, press at the far ends of the LED light bar edge softly. Otherwise the TFT Module may be damaged
10) At the insertion or removal of the Signal Interface Connector, be sure not to rotate nor tilt the Interface Connector of the TFT Module.
11) After installation of the TFT Module into an enclosure, do not twist nor bend the TFT Module even momentary. At designing the enclosure, it should be taken into consideration that no bending/twisting forces are applied to the TFT Module from outside. Otherwise the TFT Module may be damaged.
12) Small amount of materials having no flammability grade is used in the LCD module. The LCD module should be supplied by power complied with requirements of Limited Power Source (IEC60950-1 or UL60950-1), or be applied exemption.
13) Continuous operating TFT-LCD display under high temperature environment may accelerate LED exhaustion and reduce luminance dramatically.
14) Continuous displaying fixed pattern may induce image sticking. It's recommended to use screen saver or shuffle content periodically if fixed pattern is displayed on the screen.

2. General Description

This specification applies to the 17 inch Color TFT-LCD Module G170ETN02.1.

The display supports the SXGA (1280(H) x 1024(V)) screen format and 16.7M colors. All input signals are Dual Channel LVDS interface compatible.

2.1 Display Characteristics

The following items are characteristics summary on the table under 25 ℃ condition:

Items	Unit	Specifications
Screen Diagonal	[mm]	432 (17.0")
Active Area	[mm]	337.920(H) × 270.336(V)
Pixels H x V		1280 × 3(RGB) × 1024
Pixel Pitch	[mm]	0.264(per one triad) × 0.264
Pixel Arrangement		R.G.B. Vertical Stripe
Display Mode		Normally White
White Luminance	[cd/m2]	800 (Typ)
Contrast Ratio		700 : 1 (Typ)
Optical Response Time	[msec]	TBD
Nominal Input Voltage VDD	[Volt]	+5.0 (Typ)
Power Consumption	[Watt]	18.4 (Typ.)
Weight	[Grams]	1590 (Max.)
Physical Size (H x V x D)	[mm]	358.5(H) x 296.5(V) Typ. x 12.45(D) typ
Electrical Interface		Dual Channel LVDS
Surface Treatment		Anti-glare type, Hardness 3H
Support Color		16.7M colors (8-bits)
Temperature Range		
Operating	[℃]	-30 to +85
Storage (Non-Operating)	[℃]	-30 to +85
RoHS Compliance		RoHS Compliance

2.2 Optical Characteristics

The optical characteristics are measured under stable conditions at 25℃ (Room Temperature):

Item	Unit	Conditions	Min.	Typ.	Max.	Note
Viewing Angle	[degree]	Horizontal (Right) CR = 10 (Left)	70 70	80 80	-	1
		Vertical (Up) CR = 10 (Down)	50 60	70 70	-	
Luminance Uniformity	[%]	9 Points	75	80	-	2, 3
Contrast Ratio			500	700	-	4
White Luminance	[cd/m^2]		640	800	-	4
Optical Response Time	[msec]	Rising	-	TBD	-	5
		Falling	-	TBD	-	
		Rising + Falling	-	TBD	-	
Color / Chromaticity Coordinates (CIE 1931)		Red x	TBD	TBD	TBD	
		Red y	TBD	TBD	TBD	
		Green x	TBD	TBD	TBD	
		Green y	TBD	TBD	TBD	
		Blue x	TBD	TBD	TBD	
		Blue y	TBD	TBD	TBD	
		White x	TBD	TBD	TBD	
		White y	TBD	TBD	TBD	
NTSC	[%]			72		

Optical Equipment: BM-5A, BM-7, PR880, or equivalent

Note 1: Definition of viewing angle

Viewing angle is the measurement of contrast ratio ≧10, at the screen center, over a 180° horizontal and 180° vertical range (off-normal viewing angles). The 180° viewing angle range is broken down as follows; 90° (θ) horizontal left and right and 90° (Φ) vertical, high (up) and low (down). The measurement direction is typically perpendicular to the display surface with the screen rotated about its center to develop the desired measurement viewing angle.

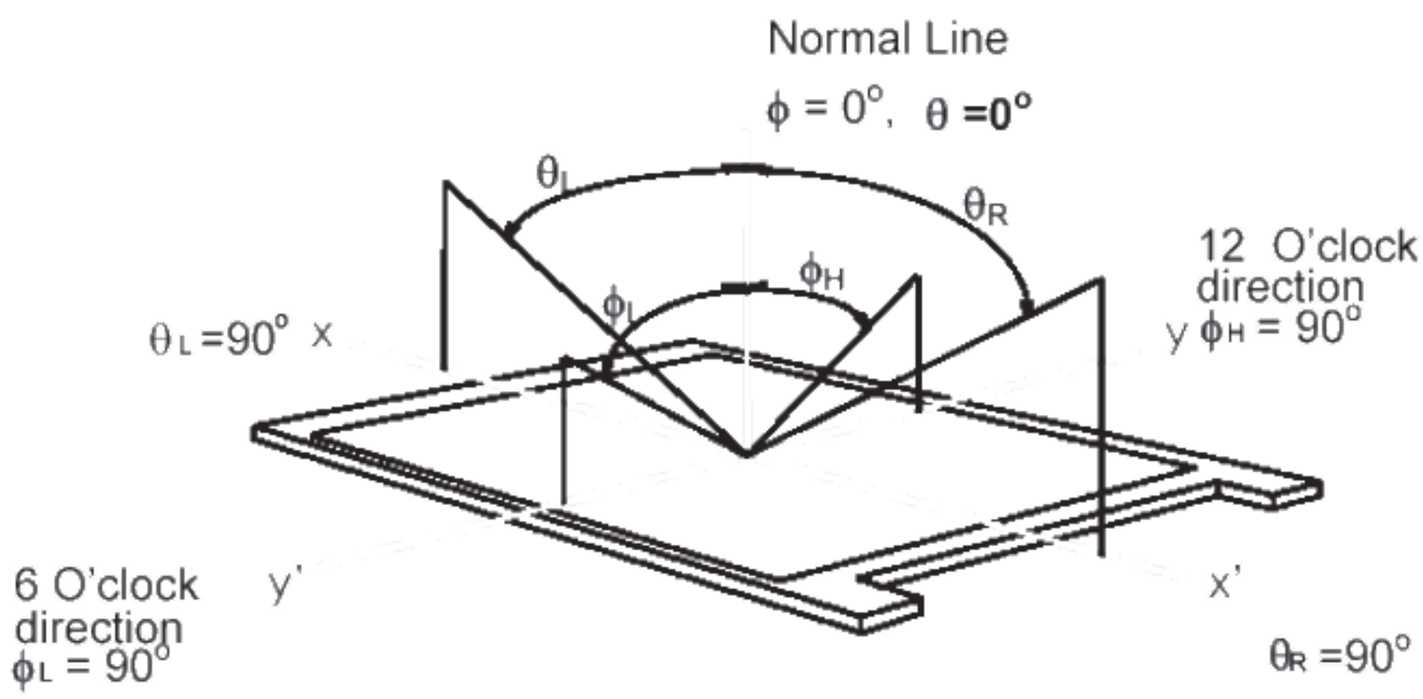

Note 2: 9 points position

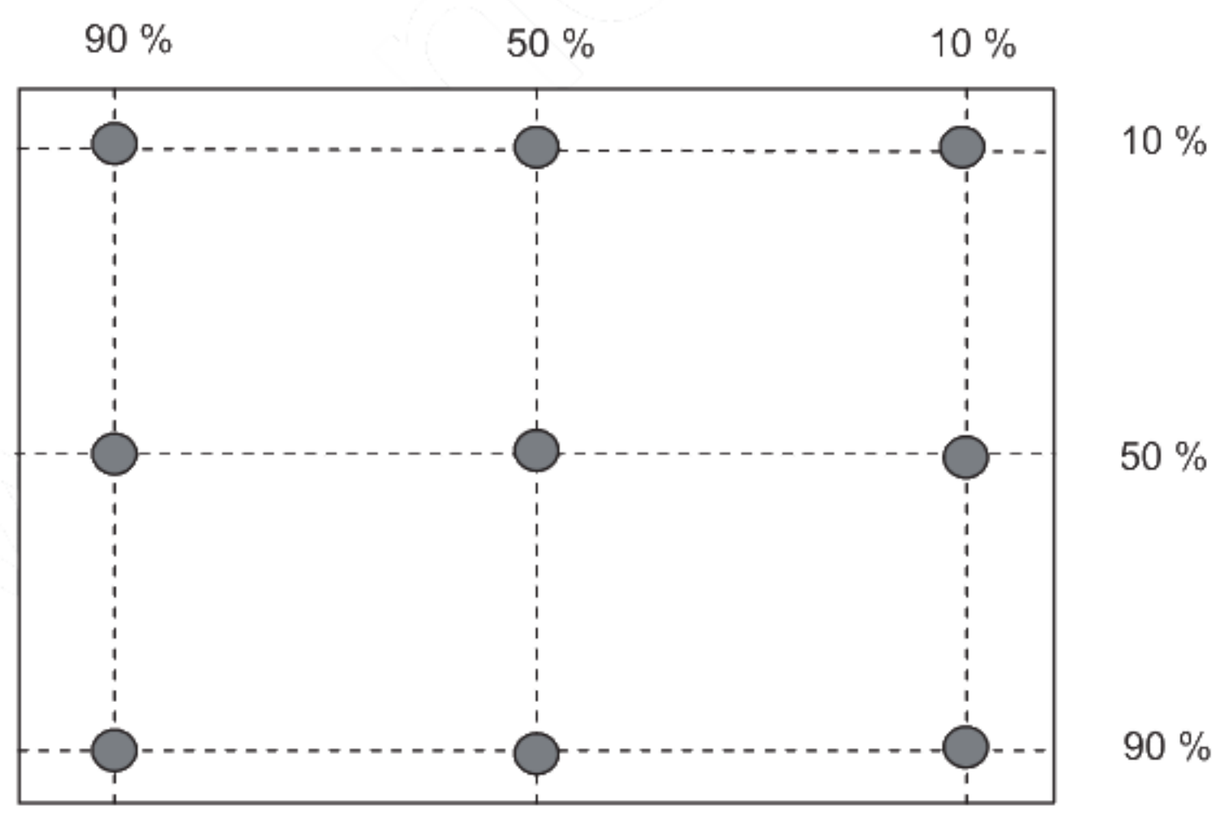

Note 3: The luminance uniformity of 9 points is defined by dividing the maximum luminance values by the minimum test point luminance

$$\delta_{W9} = \frac{\text{Minimum Luminance of 9 points}}{\text{Maximum Luminance of 9 points}}$$

Note 4: Measurement method

The LCD module should be stabilized at given temperature for 30 minutes to avoid abrupt temperature change during measuring. In order to stabilize the luminance, the measurement should be executed after lighting Backlight for 30 minutes in a stable, windless and dark room.

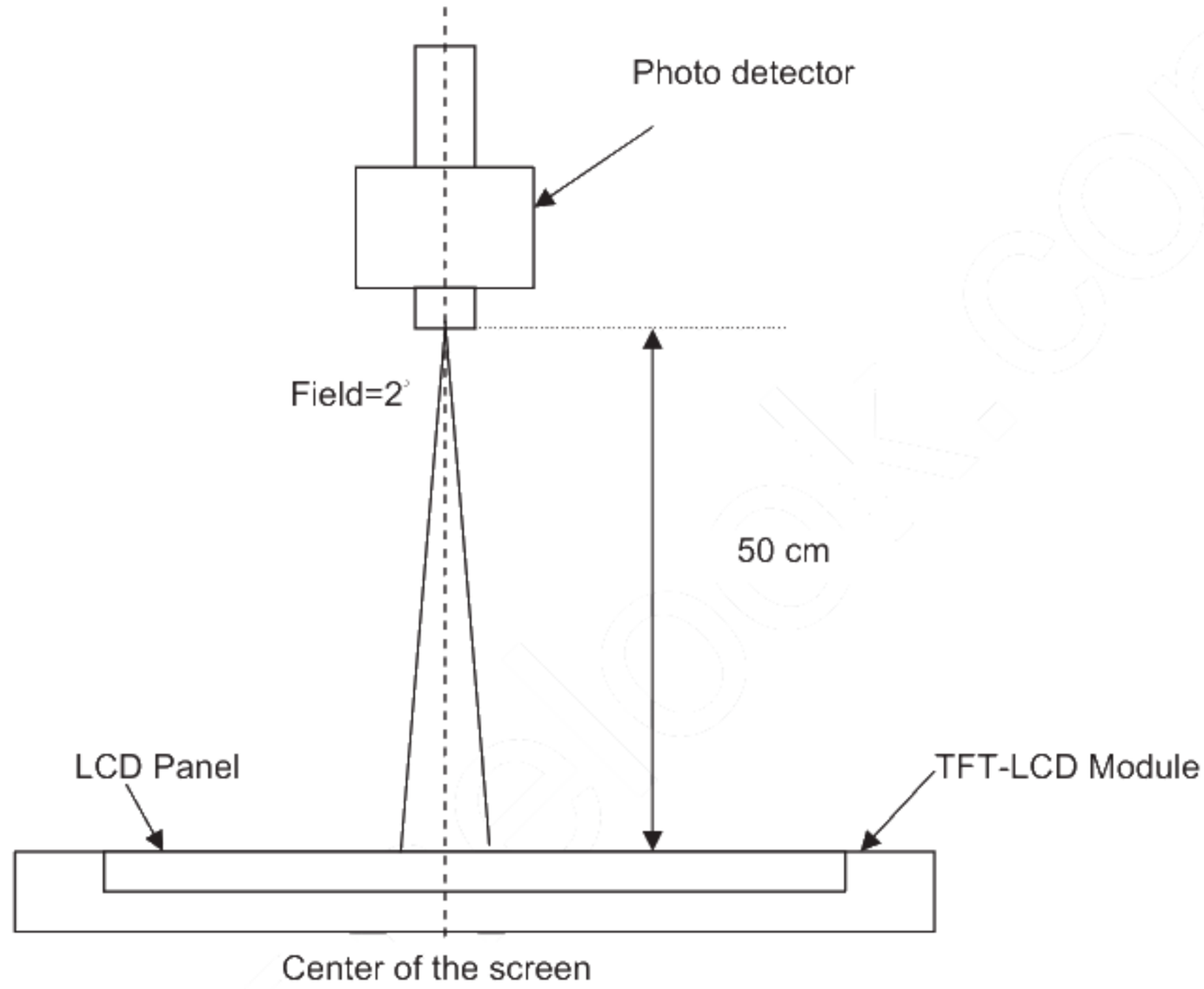

Note 5: Definition of response time:

The output signals of photo detector are measured when the input signals are changed from “Full Black” to “Full White” (rising time), and from “Full White” to “Full Black” (falling time), respectively. The response time is interval between the 10% and 90% of amplitudes. Please refer to the figure as below.

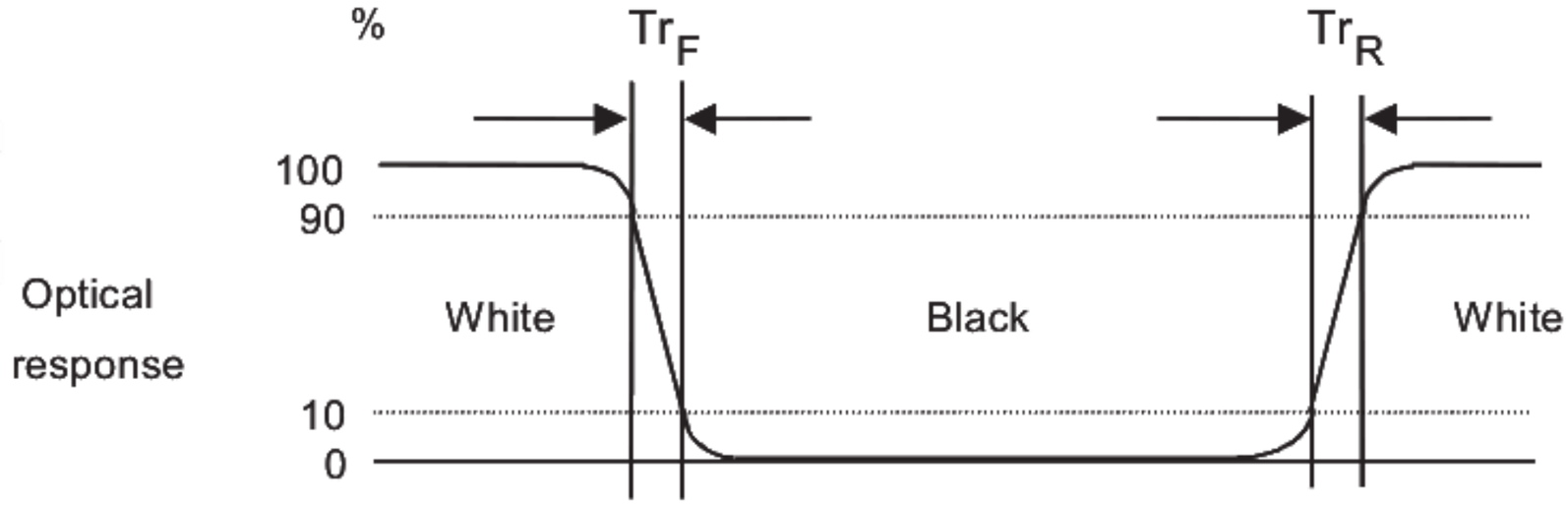

3. Functional Block Diagram

The following diagram shows the functional block of the 17.0 inches Color TFT-LCD Module:

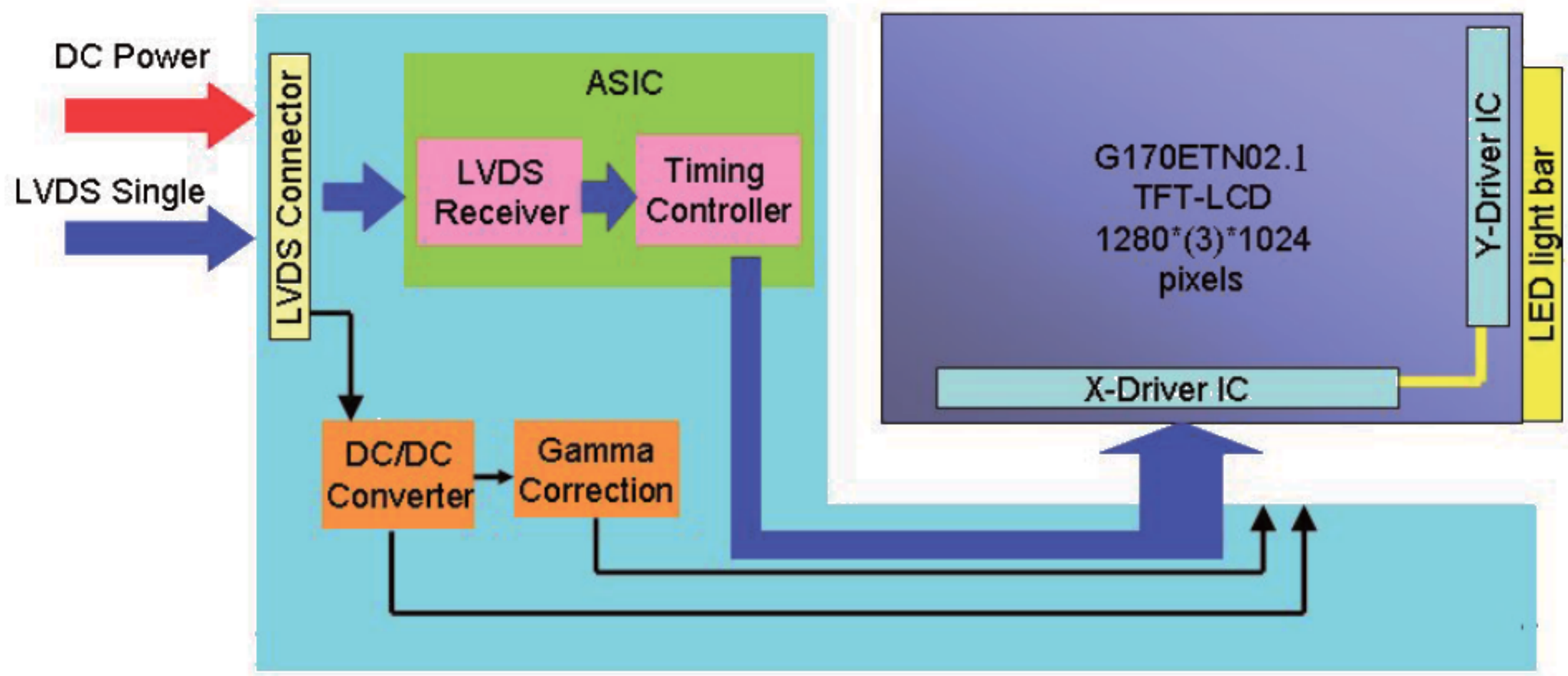

4. Absolute Maximum Ratings

An absolute maximum ratings of the module is as following:

4.1 TFT LCD Module

Item	Symbol	Min	Max	Unit	Conditions
Logic/LCD Drive Voltage	VDD	-0.3	+6	[Volt]	***Note 1,2***
Signal Voltage	RxOINi-/+, RxEINi-/+	-0.3	4	[Volt]	***Note 1,2, i=0,1,2,3***
Signal Voltage	RxOCLKON-/+ RxECLKIN-/+	-0.3	4	[Volt]	***Note 1,2***

4.2 Backlight Unit

Item	Symbol	Min	Max	Unit	Conditions
LED Forward Current	I_F	-	100	[mA]	***Note 1,2***

4.3 Absolute Ratings of Environment

Item	Symbol	Min	Max	Unit	Conditions
Operating Temperature	TOP	-30	+85	[°C]	***Note 3***
Operation Humidity	HOP	8	90	[%RH]	
Storage Temperature	TST	-30	+85	[°C]	
Storage Humidity	HST	8	90	[%RH]	

Note 1: With in Ta (25℃)

Note 2: Permanent damage to the device may occur if exceeding maximum values

Note 3: Temperature and relative humidity range are shown as the below

1. 90% RH Max
2. Max wet-bulb temperature at 39℃ or less. (Ta ≦39℃)
3. No condensation

5. Electrical characteristics

5.1 TFT LCD Module

5.1.1 Power Specification

Input power specifications are as follows:

Symble	Parameter	Min.	Typ.	Max.	Unit	Condition
VDD	Logic/LCD Drive Voltage	4.5	5.0	5.5	[Volt]	±10%
IDD	Input Current	-	1.4	1.68	[A]	VDD=5V , All Black Pattern, at 75Hz
IRush	Inrush Current	-	-	TBD	[A]	Note
PDD	VDD Power	-	7	8.4	[Watt]	VDD=5V , All Black Pattern, at 75Hz
VDDrp	Allowable Logic/LCD Drive Ripple Voltage	-	-	200	[mV] p-p	VDD=5V , All Black Pattern, at 75Hz

Note: Measurement conditions:

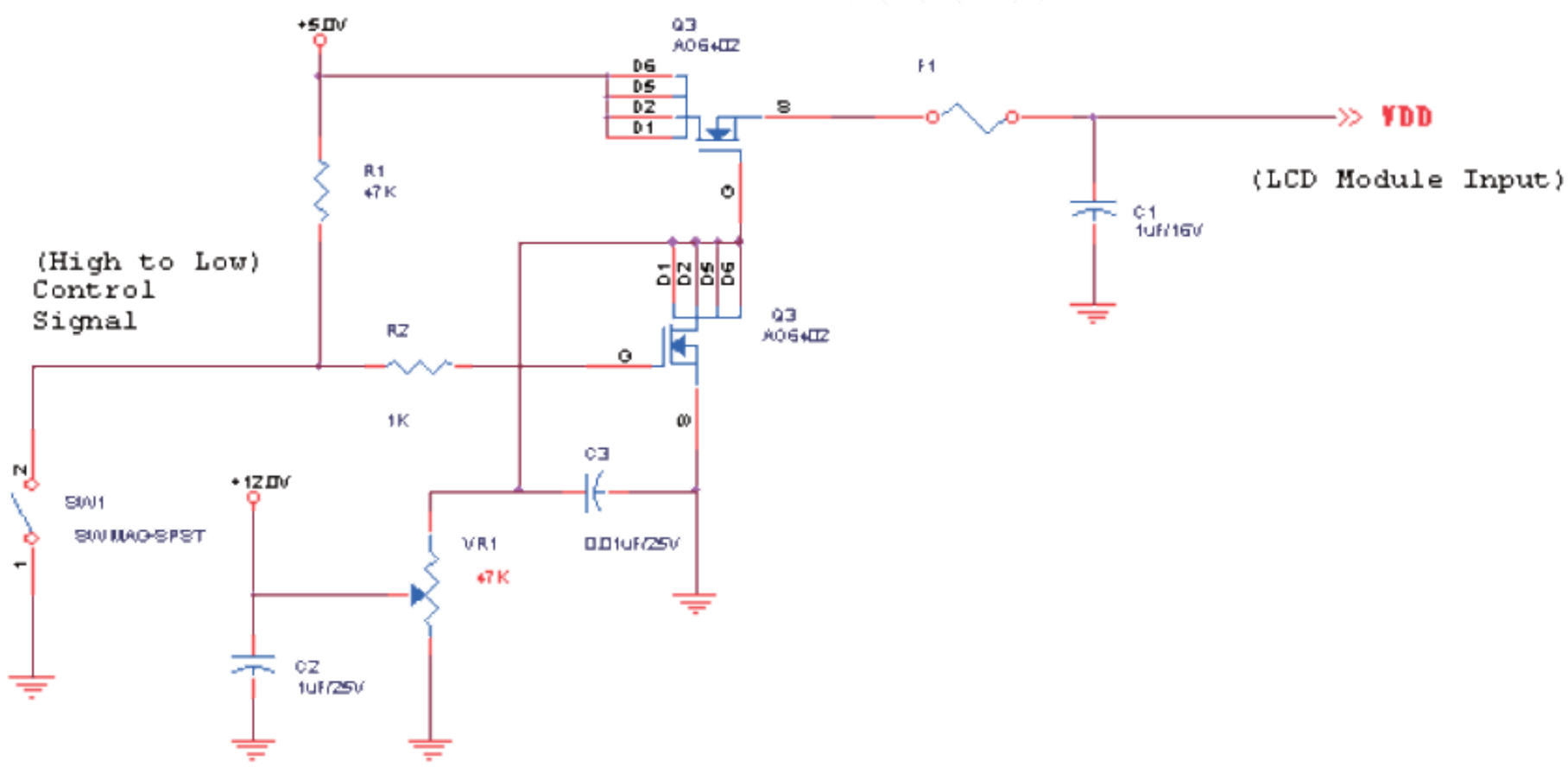

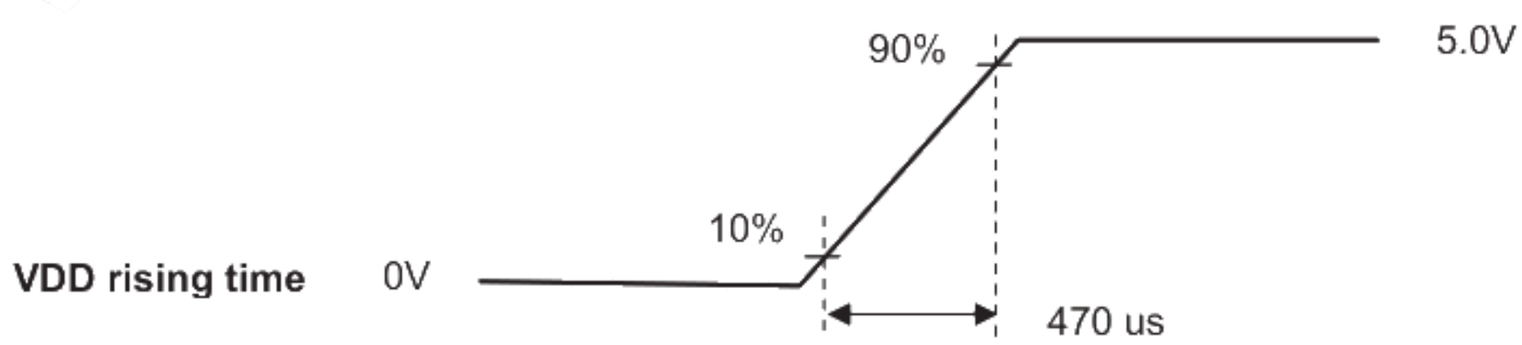

5.1.2 Signal Electrical Characteristics

Input signals shall be low or Hi-Z state when VDD is off.

It is recommended to refer the specifications of SN75LVDS82DGG (Texas Instruments) in detail.

Each signal characteristics are as follows;

Symbol	Parameter	Min	Typ	Max	Units	Condition
V_{TH}	Differential Input High Threshold	-	-	+100	[mV]	V_{CM} = 1.2V ***Note***
V_{TL}	Differential Input Low Threshold	-100	-	-	[mV]	V_{CM} = 1.2V ***Note***
$\lvert V_{ID} \rvert$	Input Differential Voltage	100	400	600	[mV]	***Note***
V_{CM}	Differential Input Common Mode Voltage	+1.0	+1.2	+1.5	[V]	V_{TH}-V_{TL} = 200mV (max) ***Note***

Note: LVDS Signal Waveform

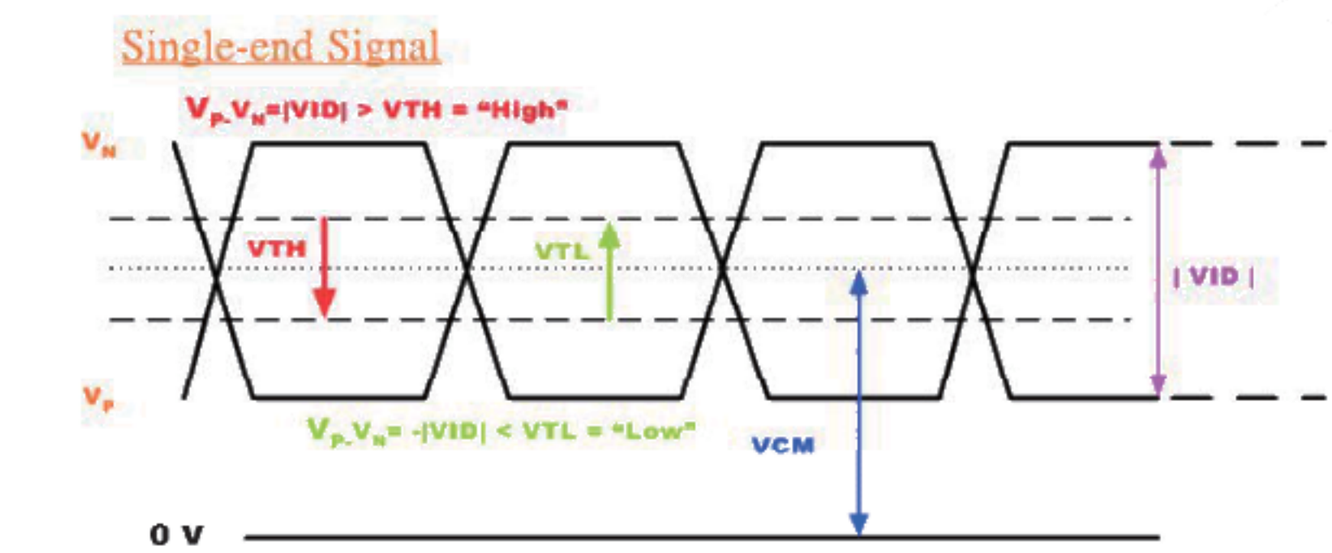

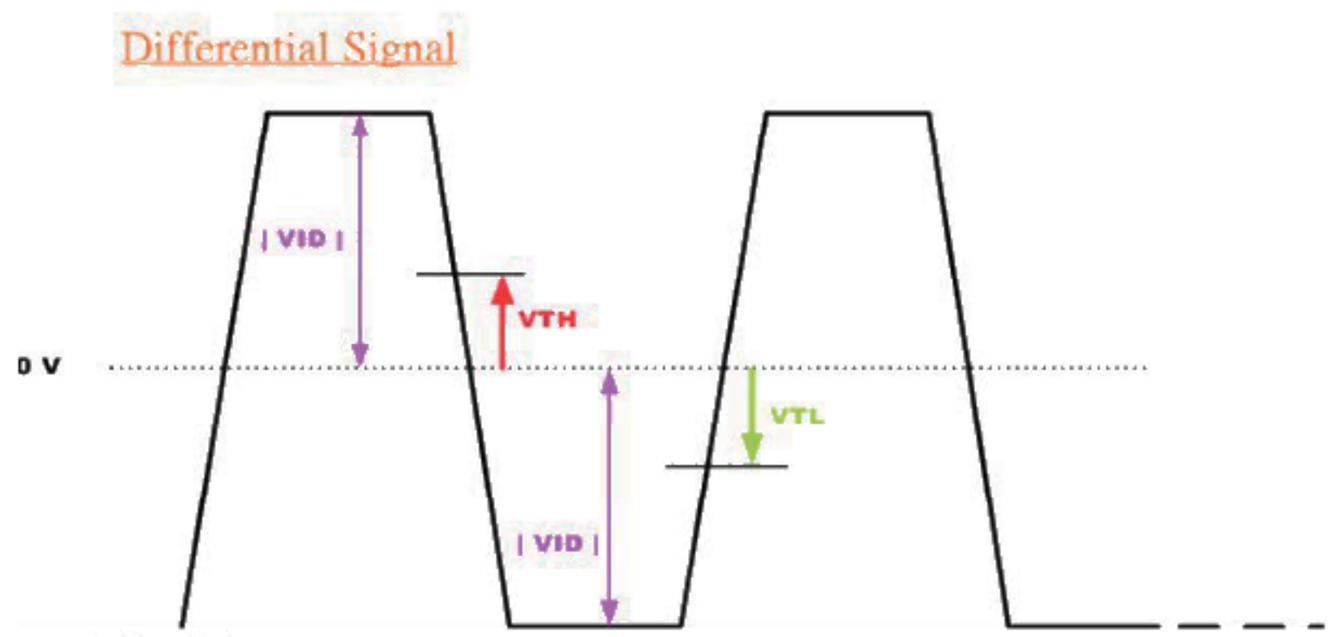

5.1.3 Backlight Unit

Parameter guideline for LED driving is under stable conditions at 25℃ (Room Temperature)

Symbol	Parameter	Min.	Typ.	Max.	Unit	Note
IR_{LED}	LED Operation Current	-	100	–	[mA] Note 1	**Operating with fixed driving current**
V_{LB}	Light Bar Operation Voltage (for reference)	-	31	34	[Volt] Note 2	
P_{BLU}	BLU Power consumption (for reference)	-	12.4	13.6	[Watt]	
LT_{LED}	LED life Time (Typical)	30,000	-	-	[Hour] Note 3	

Note 1 :The specified current is input LED chip 100% duty current.

Note 2 : The value showed in the table is one light bar's operation voltage.

Note 3 : Definition of life time : brightness becomes 50% of its original value. The minimum life time of LED unit is on the condition of IR_{LED} = 60mA and 25±2℃ (Room temperature).

Note 4: Each LED light bar consists of 48 pcs LED package (4 strings x 12 pcs / string).

AUO Confidential

6. Signal Characteristic

6.1 Pixel Format Image

Following figure shows the relationship of the input signals and LCD pixel format.

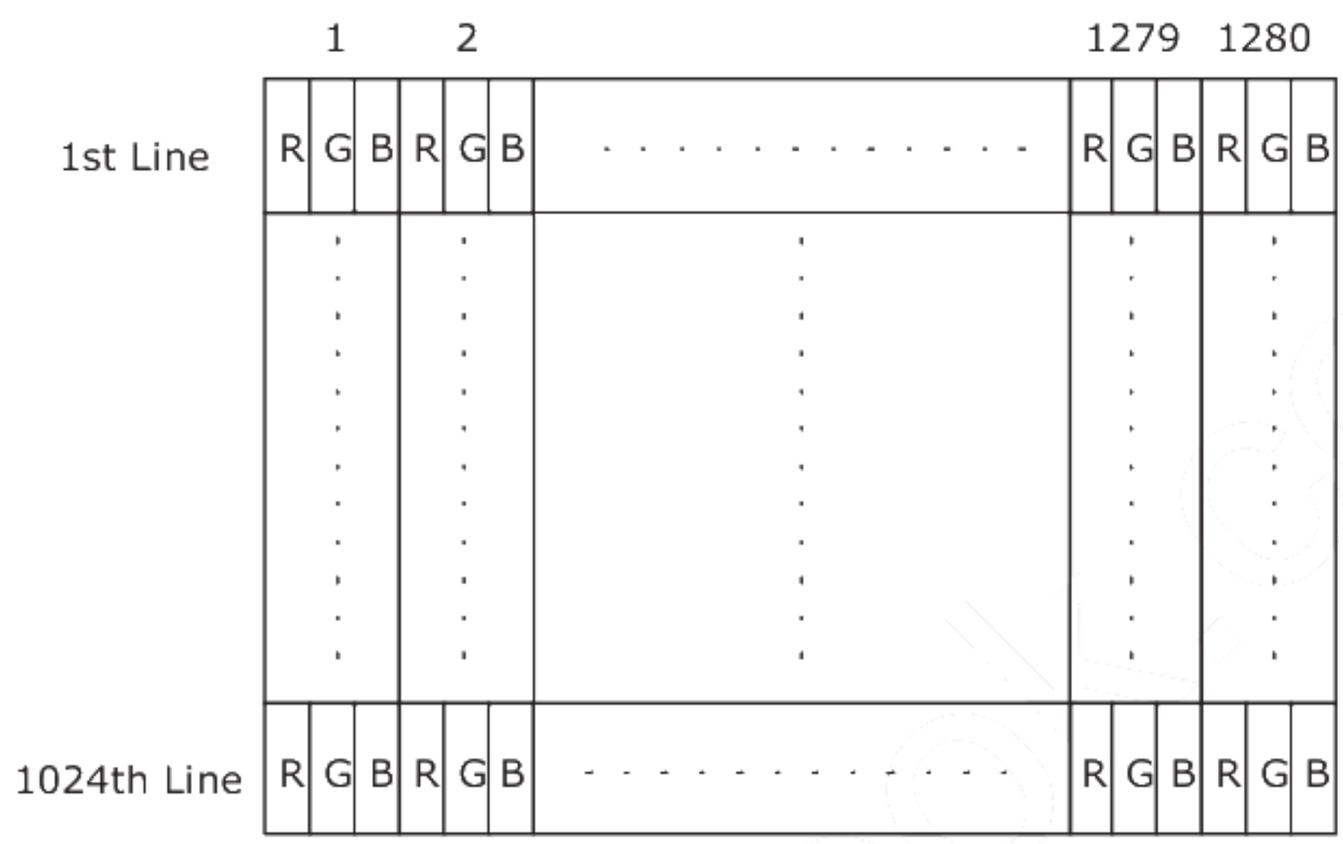

6.2 The Input Data Format

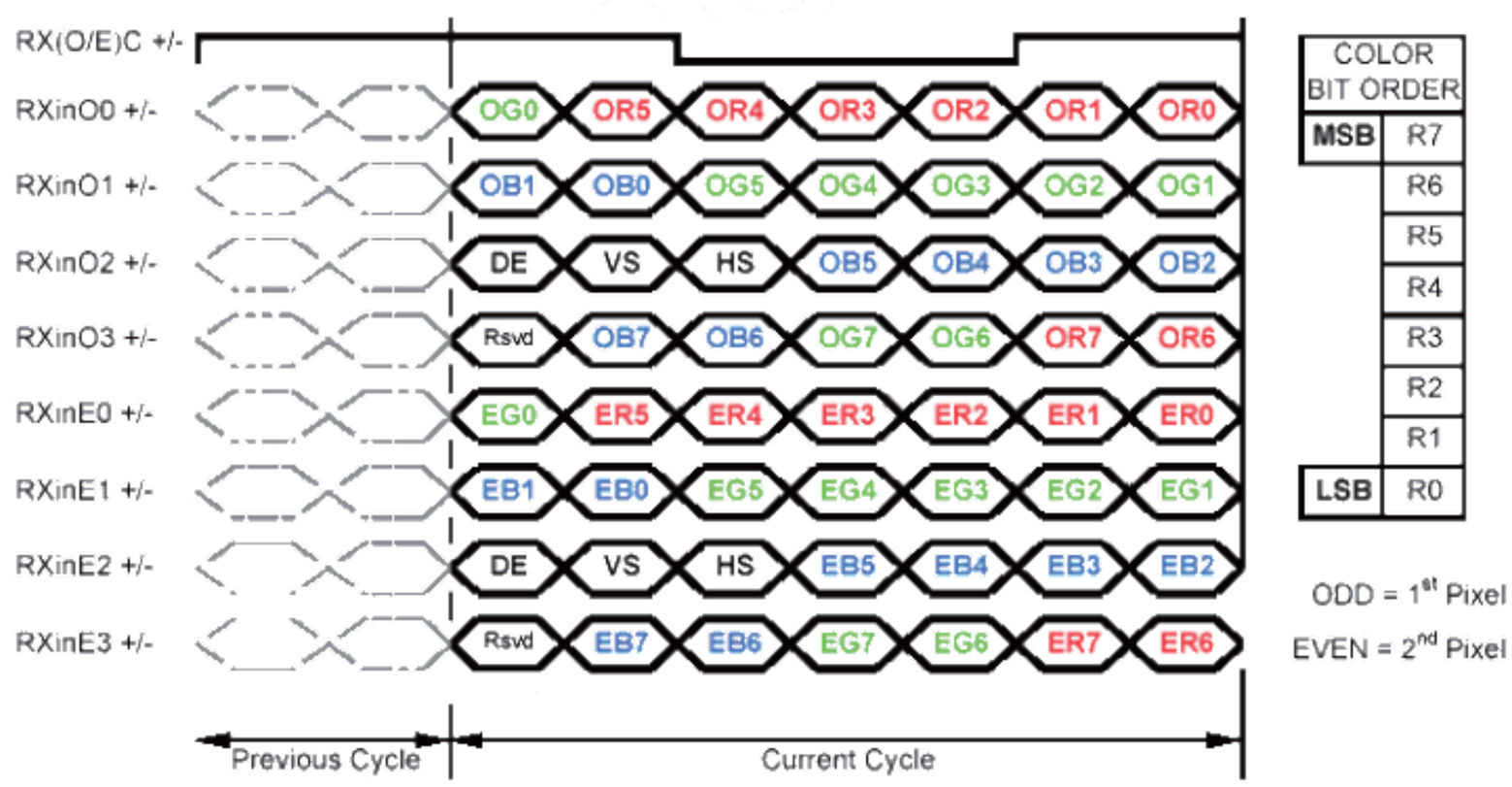

Note1: Normally, DE, VS, HS on EVEN channel are not used.

Note2: Please follow PSWG.

Note3: 8-bit in

6.3 Signal Description

The module is using a pair of LVDS receiver SN75LVDS82DGG (Texas Instruments) or compatible. LVDS is a differential signal technology for LCD interface and high speed data transfer device. LVDS transmitter shall be SN75LVDS82DGG (negative edge sampling) or compatible. The first LVDS port (RxOxxx) transmits odd pixels while the second LVDS port (RxExxx) transmits even pixels.

LVDS Connector Pin Assignment (CN1)

PIN #	SIGNAL NAME	DESCRIPTION
1	RxOIN0-	Negative LVDS differential data input (Odd data)
2	RxOIN0+	Positive LVDS differential data input (Odd data)
3	RxOIN1-	Negative LVDS differential data input (Odd data)
4	RxOIN1+	Positive LVDS differential data input (Odd data)
5	RxOIN2-	Negative LVDS differential data input (Odd data, H-Sync,V-Sync,DSPTMG)
6	RxOIN2+	Positive LVDS differential data input (Odd data, H-Sync,V-Sync,DSPTMG)
7	GND	Power Ground
8	RxOCLKIN-	Negative LVDS differential clock input (Odd clock)
9	RxOCLKIN+	Positive LVDS differential clock input (Odd clock)
10	RxOIN3-	Negative LVDS differential data input (Odd data)
11	RxOIN3+	Positive LVDS differential data input (Odd data)
12	RxEIN0-	Negative LVDS differential data input (Even data)
13	RxEIN0+	Positive LVDS differential data input (Even data)
14	GND	Power Ground
15	RxEIN1-	Negative LVDS differential data input (Even data)
16	RxEIN1+	Positive LVDS differential data input (Even data)
17	GND	Power Ground
18	RxEIN2-	Negative LVDS differential data input (Even data)
19	RxEIN2+	Positive LVDS differential data input (Even data)
20	RxECLKIN-	Negative LVDS differential clock input (Even clock)
21	RxECLKIN+	Positive LVDS differential clock input (Even clock)
22	RxEIN3-	Negative LVDS differential data input (Even data)
23	RxEIN3+	Positive LVDS differential data input (Even data)
24	GND	Power Ground
25	GND (AGMODE)	Power Ground (For AUO test Aging mode)
26	GND	Power Ground
27	GND	Power Ground
28	VDD	+5.0V Power Supply
29	VDD	+5.0V Power Supply
30	VDD	+5.0V Power Supply

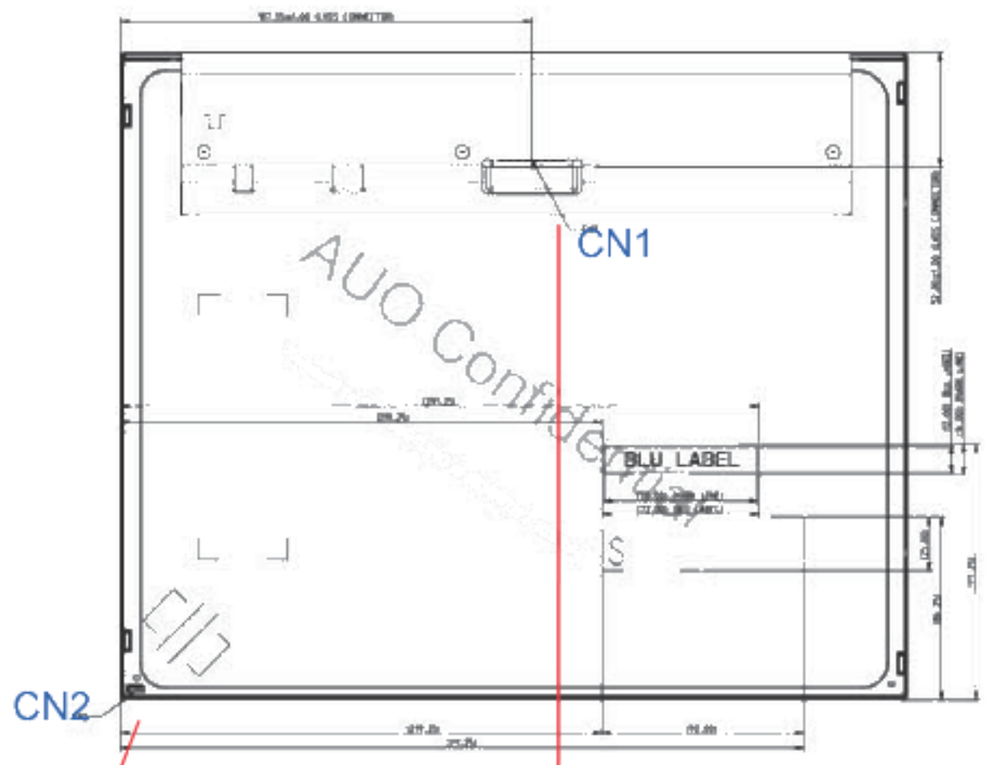

LED Driver Connector (CN2)

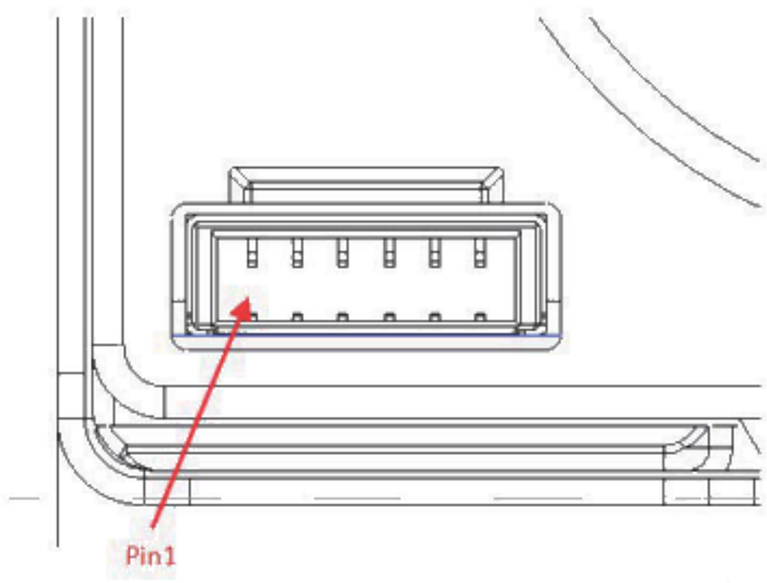

LVDS Connector (CN1)

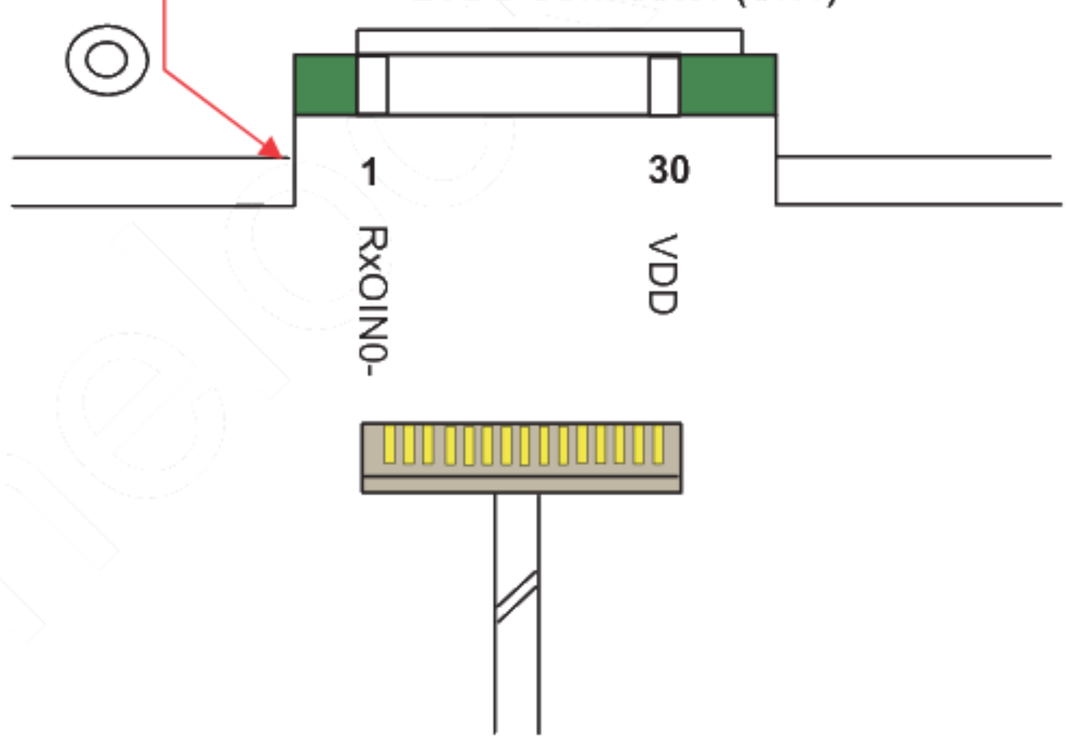

6.4 Timing Characteristics

6.4.1 Timing Characteristics

Basically, interface timings described here is not actual input timing of LCD module but output timing of SN75LVDS82DGG (Texas Instruments) or equivalent.

Signal	Item	Symbol	Min	Typ	Max	Unit
Vertical Section	Period	Tv	1034	1066	1150	Th
	Active	Tdisp(v)	1024	1024	1024	Th
	Blanking	Tbp(v)+Tfp(v)+PWvs	10	42	126	Th
Horizontal Section	Period	Th	750	844	2048	Tclk
	Active	Tdisp(h)	640	640	640	Tclk
	Blanking	Tbp(h)+Tfp(h)+PWhs	110	204	-	Tclk
Clock	Period	Tclk	14.81	18.52	25	ns
	Frequency	Freq	40	54	70	MHz
Frame rate	Frame rate	F	49	60	76	Hz

Note : DE mode only

6.4.2 Timing Diagram

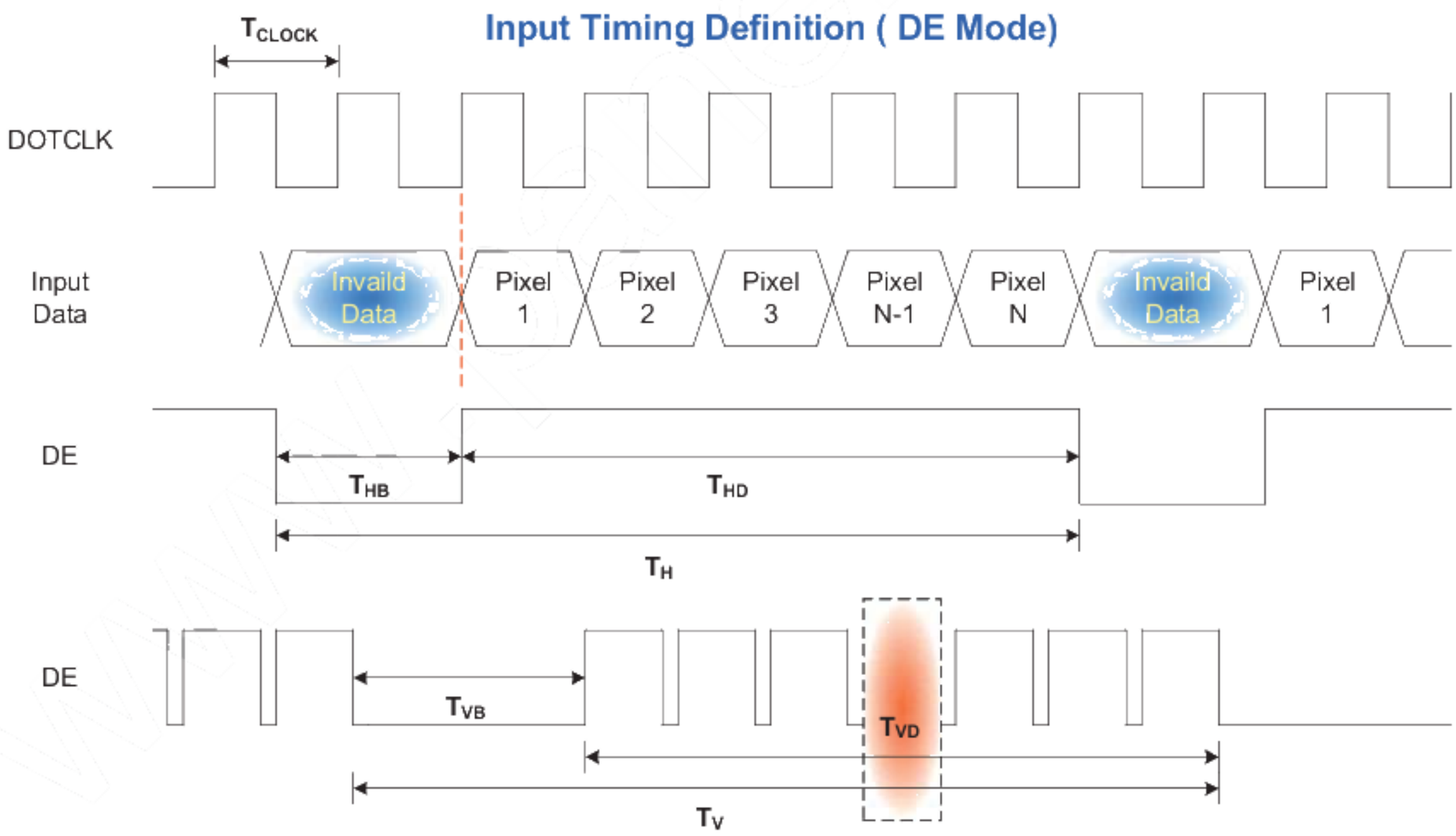

6.5 Power ON/OFF Sequence

VDD power and LED on/off sequence is as follows. Interface signals are also shown in the chart. Signals from any system shall be Hi-Z state or low level when VDD is off.

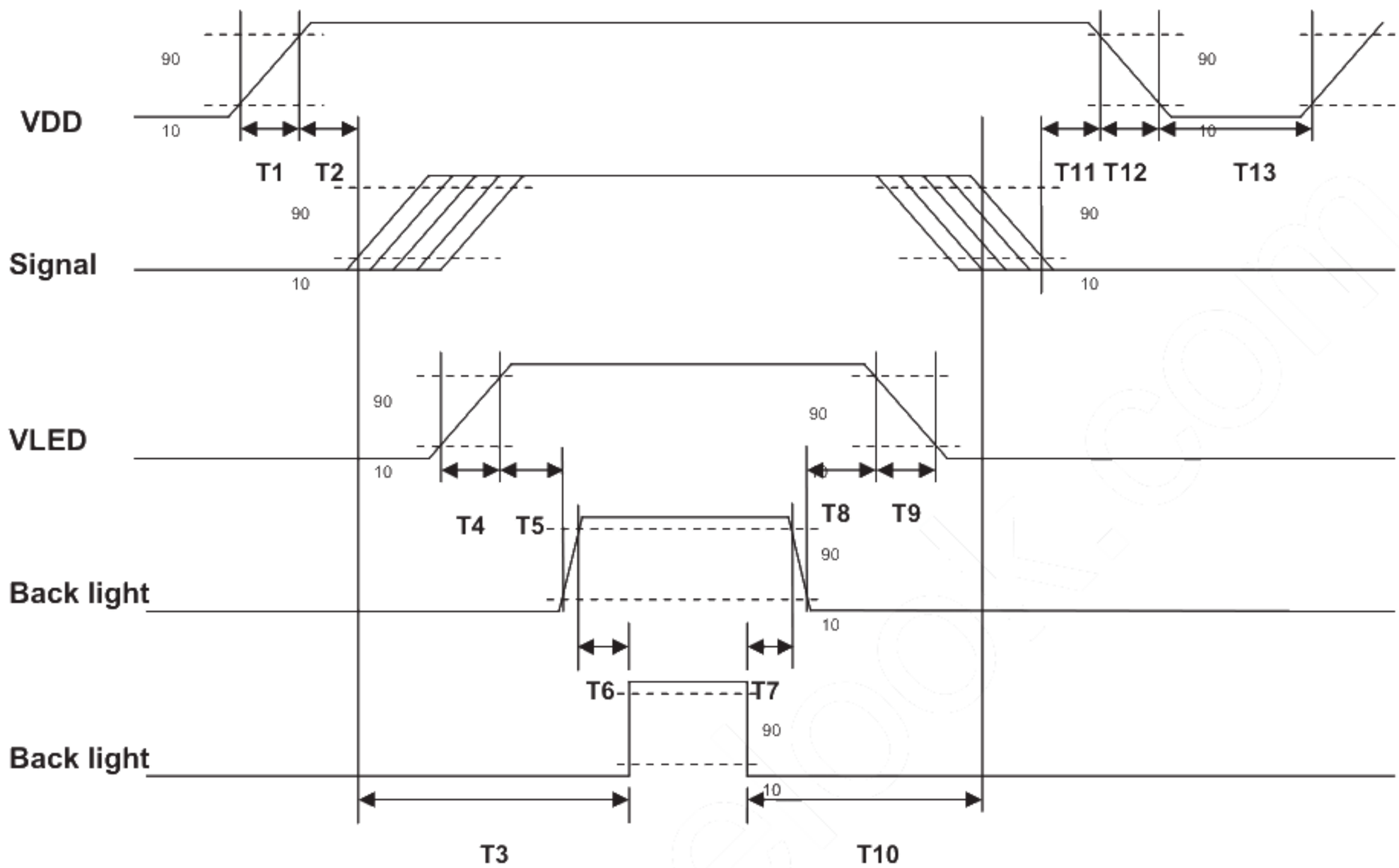

Power Sequence Timing

Parameter	Value			Unit
	Min.	Typ.	Max.	
T1	0.5	-	10	[ms]
T2	30	40	50	[ms]
T3	200	-	-	[ms]
T4	0.5	-	10	[ms]
T5	10	-	-	[ms]
T6	10	-	-	[ms]
T7	0	-	-	[ms]
T8	10	-	-	[ms]
T9	-	-	10	[ms]
T10	110	-	-	[ms]
T11	0	16	50	[ms]
T12	-	-	10	[ms]
T13	1000	-	-	[ms]

7. Connector & Pin Assignment

Physical interface is described as for the connector on module.These connectors are capable of accommodating the following signals and will be following components.

7.1 TFT LCD Module

7.1.1 Connector

Connector Name / Designation	Interface Connector
Manufacturer	HRS
Type Part Number	MDF76URW-30S-1H(55)
Mating Housing Part Number	MDF76-30P-1C

7.1.2 LVDS Pin Assignment (CN1)

Pin#	Signal Name	Pin#	Signal Name
1	RxOIN0-	2	RxOIN0+
3	RxOIN1-	4	RxOIN1+
5	RxOIN2-	6	RxOIN2+
7	GND	8	RxOCLKIN-
9	RxOCLKIN+	10	RxOIN3-
11	RxOIN3+	12	RxEIN0-
13	RxEIN0+	14	GND
15	RxEIN1-	16	RxEIN1+
17	GND	18	RxEIN2-
19	RxEIN2+	20	RxECLKIN-
21	RxECLKIN+	22	RxEIN3-
23	RxEIN3+	24	GND
25	GND (AGMODE)	26	GND
27	GND	28	VDD
29	VDD	30	VDD

7.2 Backlight Unit

Physical interface is described as for the connector on module. These connectors are capable of accommodating the following signals and will be following components.

Connector Name / Designation	**LED Connector**
Manufacturer	E&T
Connector Model Number	3707K-S06N-00L

7.2.1 Pin Assignment (CN2)

Pin No.	**Signal Name**
1	VOUT1
2	VOUT2
3	VIN
4	VIN
5	VOUT3
6	VOUT4

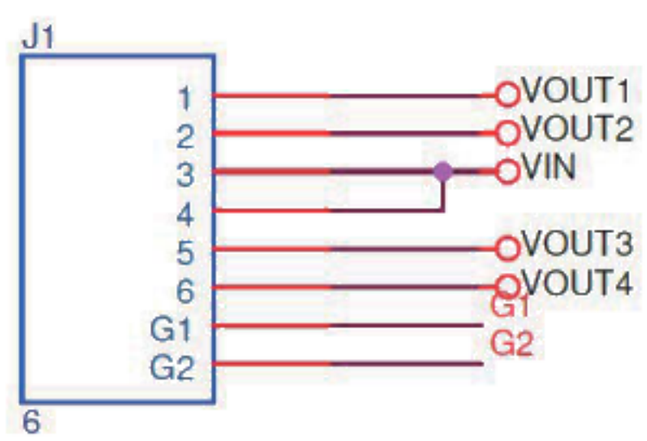

8. Reliability Test

Environment test conditions are listed as following table.

Items	Required Condition	Note
Temperature Humidity Bias (THB)	Ta= 50℃, 80%RH, 240hours	2
High Temperature Operation (HTO)	Ta= 85℃, 240hours	2
Low Temperature Operation (LTO)	Ta= -30℃, 240hours	2
High Temperature Storage (HTS)	Ta= 85℃, 240hours	2
Low Temperature Storage (LTS)	Ta= -30℃, 240hours	2
Vibration Test (Non-operation)	Acceleration: 1.5 Grms Wave: Random Frequency: 10 – 200 Hz Sweep: 30 Minutes each Axis (X, Y, Z)	
Shock Test (Non-operation)	Acceleration: 50 G Wave: Half-sine Active Time: 20 ms Direction: ±X, ±Y, ±Z (one time for each Axis)	
Thermal Shock Test (TST)	-20℃/30min, 60℃/30min, 50 cycles	
On/Off Test	On/10sec, Off/10sec, 30,000 cycles	
ESD	Contact Discharge: ± 8KV, 150pF(330Ω) 1sec, 8 points, 25 times/ point.	1
	Air Discharge: ± 15KV, 150pF(330Ω) 1sec 8 points, 25 times/ point.	

Note1: According to EN61000-4-2, ESD class B: Some performance degradation allowed. No data lost Self-recoverable. No hardware failures.

Note2:

- Water condensation is not allowed for each test items.
- Each test is done by new TFT-LCD module. Don't use the same TFT-LCD module repeatedly for reliability test.
- The reliability test is performed only to examine the TFT-LCD module capability.
- To inspect TFT-LCD module after reliability test, please store it at room temperature and room humidity for 24 hours at least in advance.
- No function failure occurs. Mura shall be ignored after high temperature reliability test.

9. Label and Packaging

9.1 Shipping Label

The shipping label format is shown as below.

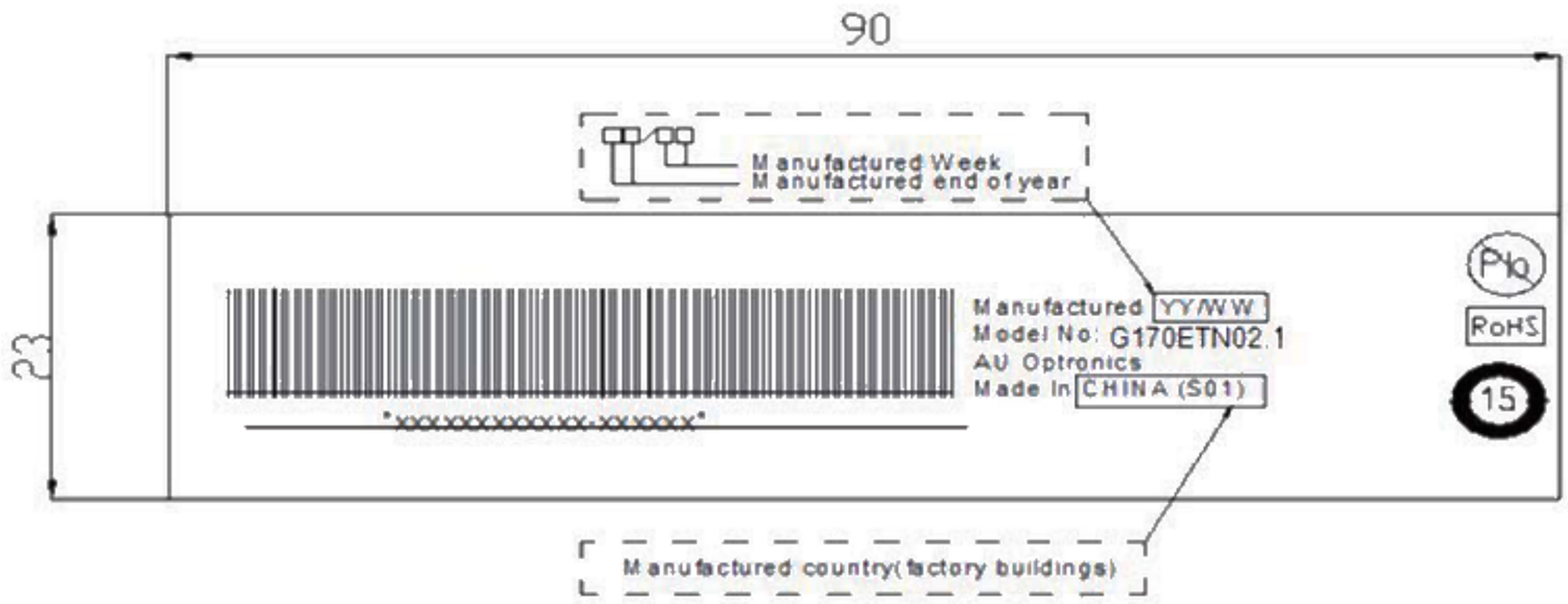

9.2 Carton Package

Max capacity：8 TFT-LCD module per carton

Max weight: 13.5 kg per carton

Outside dimension of carton:448(L)mm*283(W)mm*397(H)mm

Pallet size： 1150 mm *910 mm * 138mm

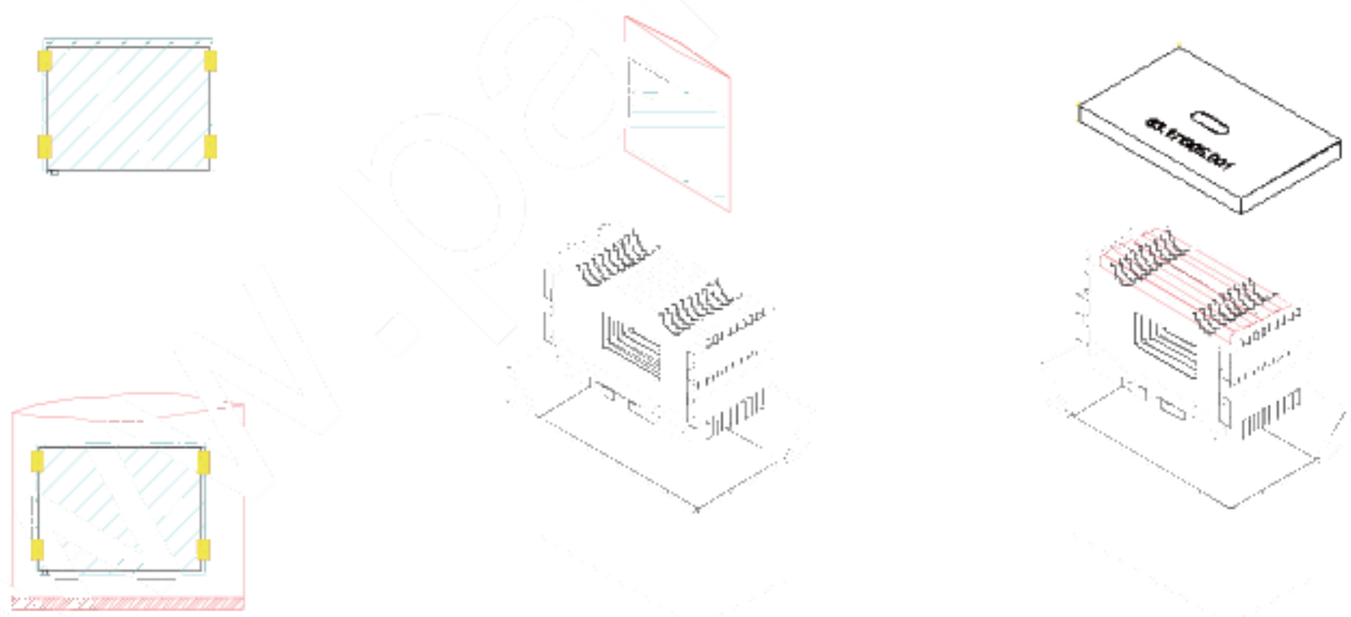

10. Mechanical Characteristics

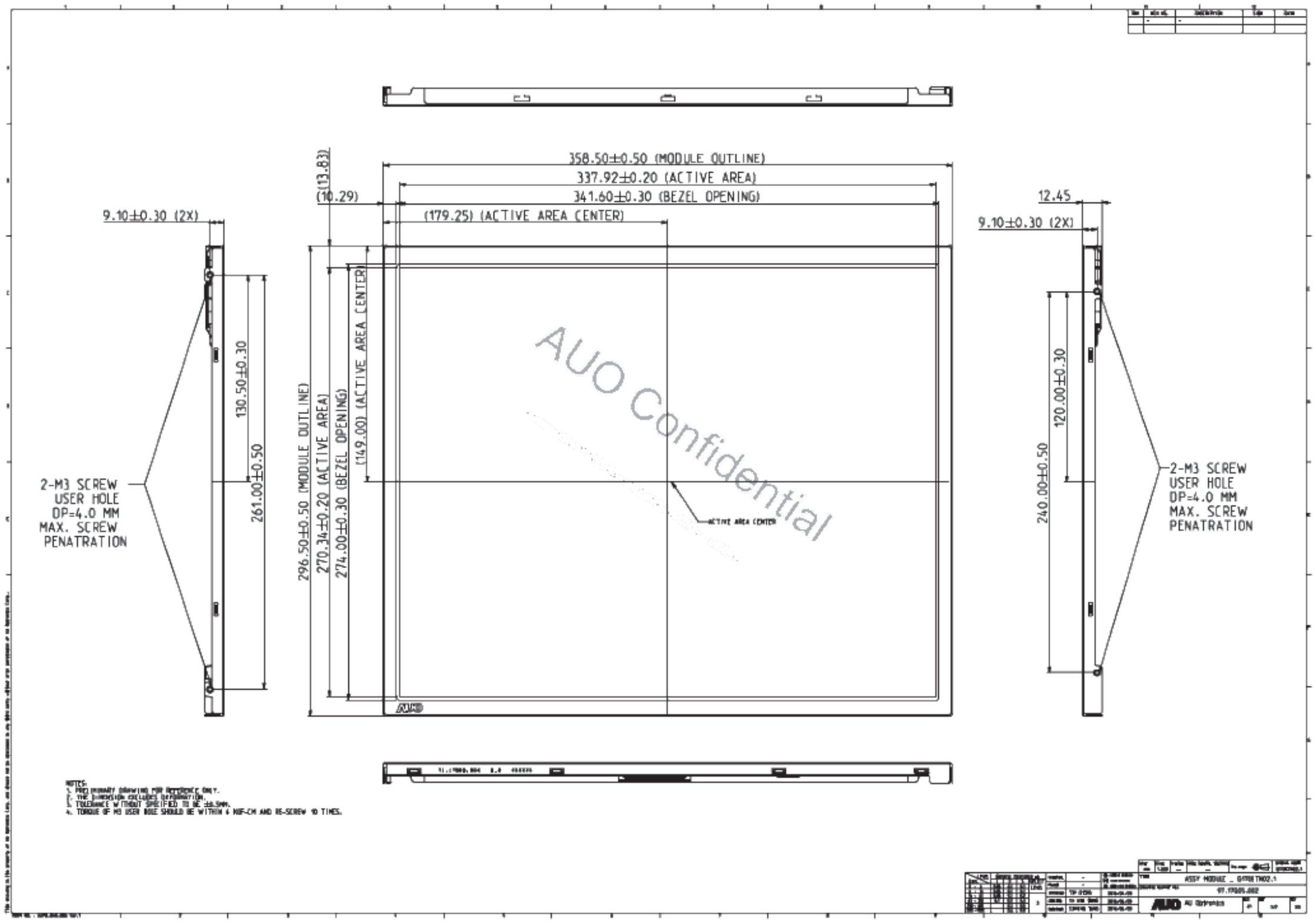

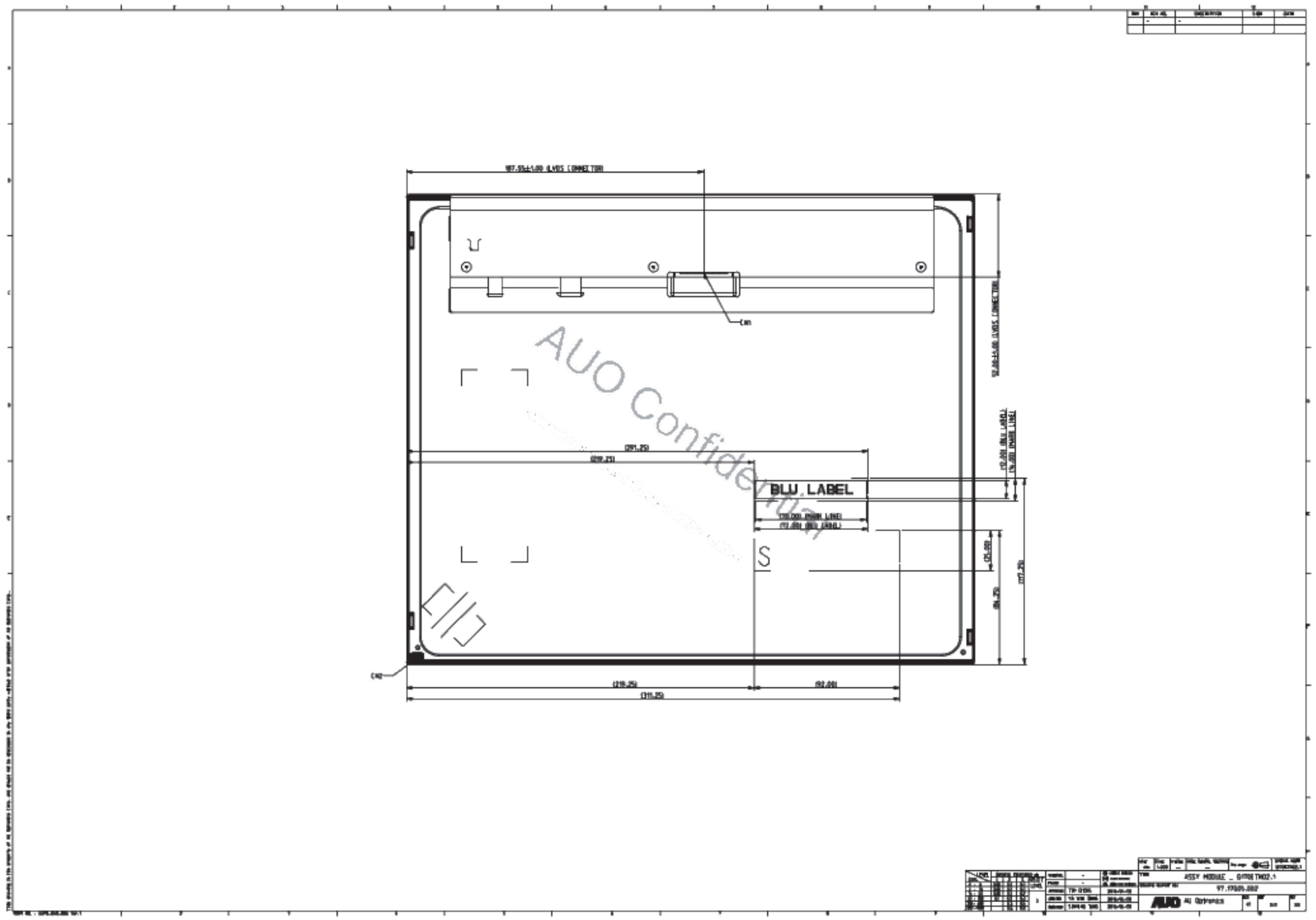
BLU LABEL
AUO Confidential