■ **Preliminary Specification**
☐ **Final Specification**

Module	19.0” SXGA Monochrome TFT-LCD
Model Name	G190EAN01.1

Customer	**Date**	**Checked & Approved by**	**Date**
		Crystal Hsieh	8/ 20, 2014
Approved by		**Prepared by**	
		Ginger Lin	8/ 20, 2014
Note: This Specification is subject to change without notice.		Audio-Video Business Unit / AU Optronics corporation	

www.lcdtv.com

Record of Revision

Version & Date	Page	Old Description	New Description
0.1 2014/1/22	All	Frist Edition for Customer	
0.2 2014/8/20	5 & 6	White Luminance: 1000 cd/m^2	White Luminance: 1300 cd/m^2
	5	Power Consumption: 19.9W	Power Consumption: 18.62W
	6	View Angle min: 75 degree	View Angle min: 80 degree
		Color Coordinates tolerance: TBD	Color Coordinates tolerance: +/- 0.03
	15	Ivcc Typ. 1.2 Pvcc Typ. 14.4W Max. TBD Irush LED: Max. TBD	Ivcc Typ. 1.26A Pvcc Typ. 15.12W; Max.16.63W Irush LED: Max. 2.5A
	24	LED connector: MS24019R	LED connector: MS24019RHD
	27~28		Update mechanical drawing

Contents

1. Handling Precautions **4**
2. General Description **5**
2.1 Display Characteristics 5
2.2 Optical Characteristics 6
3. Functional Block Diagram **10**
4. Absolute Maximum Ratings **11**
4.1 Absolute Ratings of TFT LCD Module 11
4.2 Absolute Ratings of Backlight Unit 11
4.3 Absolute Ratings of Environment 11
5. Electrical characteristics **13**
5.1 TFT LCD Module 13
5.2 Backlight Unit 15
6. Signal Characteristic **16**
6.1 Pixel Format Image 16
6.2 The Input Data Format 17
6.4 Interface Timing 20
6.5 Power ON/OFF Sequence 22
7. Connector & Pin Assignment **23**
7.1 TFT LCD Module 23
7.2 Backlight Unit 24
8. Reliability Test **25**
9. Shipping Label and Packaging **26**
9.1 Shipping Label 26
9.2 Packaging 26
10. Mechanical Characteristic **27**

1. Handling Precautions

1) Since front polarizer is easily damaged, pay attention not to scratch it.
2) Be sure to turn off power supply when inserting or disconnecting from input connector.
3) Wipe off water drop immediately. Long contact with water may cause discoloration or spots.
4) When the panel surface is soiled, wipe it with absorbent cotton or other soft cloth.
5) Since the panel is made of glass, it may break or crack if dropped or bumped on hard surface.
6) Since CMOS LSI is used in this module, take care of static electricity and insure human earth when handling.
7) Do not open or modify the Module Assembly.
8) Do not press the reflector sheet at the back of the module to any directions.
9) In case if a Module has to be put back into the packing container slot after once it was taken out from the container, do not press the center of LED light bar edge. Instead, press at the far ends of LED light bar edge softly. Otherwise the TFT Module may be damaged.
10) At the insertion or removal of the Signal Interface Connector, be sure not to rotate nor tilt the Interface Connector of the TFT Module.
11) After installation of the TFT Module into an enclosure, do not twist nor bend the TFT Module even momentary. At designing the enclosure, it should be taken into consideration that no bending/twisting forces are applied to the TFT Module from outside. Otherwise the TFT Module may be damaged.
12) Small amount of materials having no flammability grade is used in the LCD module. The LCD module should be supplied by power complied with requirements of Limited Power Source (IEC60950 or UL1950), or be applied exemption.
13) Avoid stressing front bezel position when doing mechanical design.

2. General Description

G190EAN01.1 is a Monochrome Active Matrix Liquid Crystal Display composed of a TFT-LCD panel, a driver circuit, and a backlight system. The screen format is intended to support the SXGA (1280(H) x 1024(V)) screen and 256 gray scales per one sub-pixel (8 bit). All input signals are 2-channel LVDS interface compatible.

2.1 Display Characteristics

The following items are characteristics summary on the table under 25 °C condition:

Items	Unit	Specifications
Screen Diagonal	[mm]	482.6 (19.0")
Active Area	[mm]	376.32 (H) x 301.06 (V)
Pixels H x V		1280(H) x 1024(V) x 3 (1pixel consists of 3 sub-piexls)
Pixel Pitch	[mm]	0.294 (per one triad) x 0.294
Pixel Arrangement		Sub-pixel Vertical Stripe
Display Mode		Normally Black
White Luminance	[cd/m^2]	1300 (center, Typ) @ 80mA
Contrast Ratio		1000 : 1 (Typ)
Optical ResponseTime	[msec]	25 (Typ, on/off)
Nominal Input Voltage VDD	[Volt]	+5.0 V
Power Consumption	[Watt]	18.62 W (Typical)
Weight	[Grams]	1550 (TYP)
Physical Size (H x V x D)	[mm]	396 (H) x 324 (V) x 17.0 (D) (Typ)
Electrical Interface		Dual channel LVDS
Surface Treatment		Anti-Glare treatment
Support Color		256 gray scales per one sub-pixel (8 bit)
Temperature Range Operating Storage (Non-Operating)	 [°C] [°C]	 0 to +50 -20 to +60
RoHS Compliance		RoHS Compliance

2.2 Optical Characteristics

The optical characteristics are measured under stable conditions at 25℃ (Room Temperature):

Item	Unit	Conditions	Min.	Typ.	Max.	Note
Viewing Angle	[degree]	Horizontal (Right) CR = 10 (Left)	80 80	89 89	-	1
		Vertical (Up) CR = 10 (Down)	80 80	89 89	-	
Luminance Uniformity	[%]	9 Points	75	80	-	2, 3
Optical Response Time	[msec]	Rising	-	13	18	4, 6
		Falling	-	12	17	
		Rising + Falling	--	25	35	
Color / Chromaticity Coordinates (CIE)		White x	0.264	0.294	0.324	
		White y	0.279	0.309	0.339	
White Luminance (At LED= 80mA)	[cd/m^2]		1000	1300	-	4
Contrast Ratio	-		700	1000	-	4
Cross Talk (At 60Hz)	[%]		-	-	1.5	5

Note 1: Definition of viewing angle, measured by ELDIM (EZContrast 88)

Viewing angle is the measurement of contrast ratio ≧ 10, at the screen center, over a 180° horizontal and 180° vertical range (off-normal viewing angles). The 180° viewing angle range is broken down as follows; 90° (θ) horizontal left and right and 90° (Φ) vertical, high (up) and low (down). The measurement direction is typically perpendicular to the display surface with the screen rotated about its center to develop the desired measurement viewing angle.

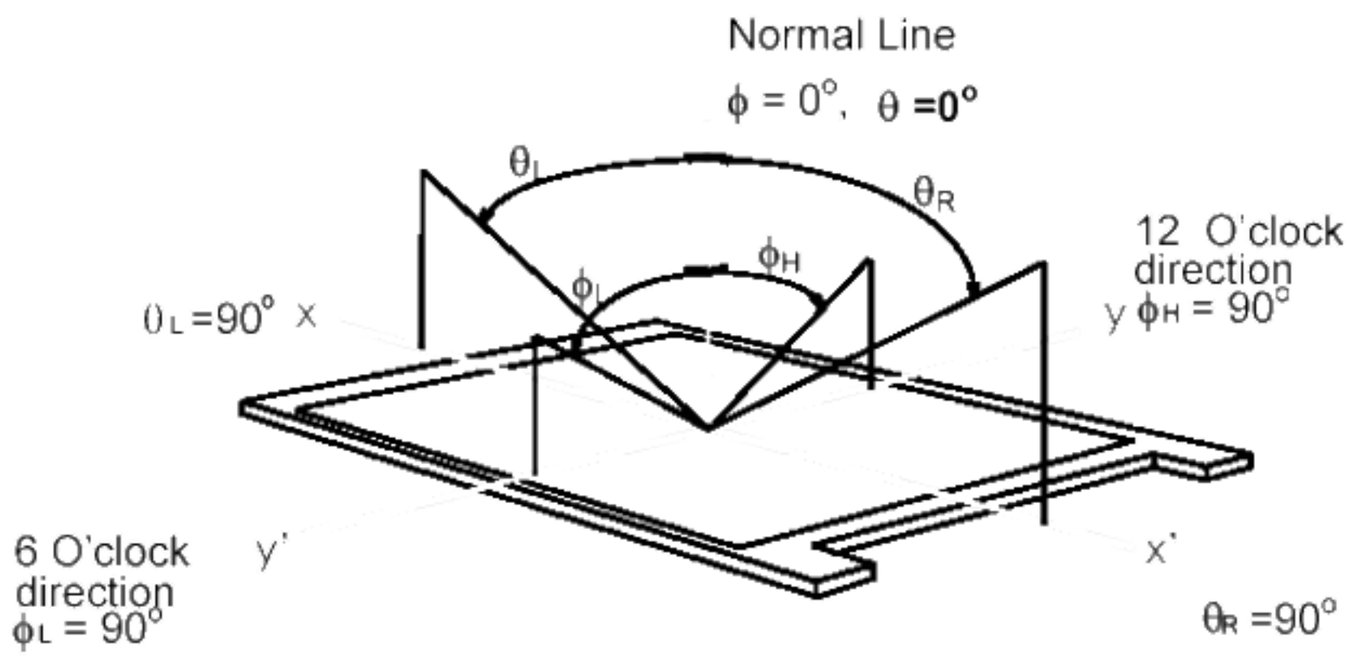

Note 2: 9 points position

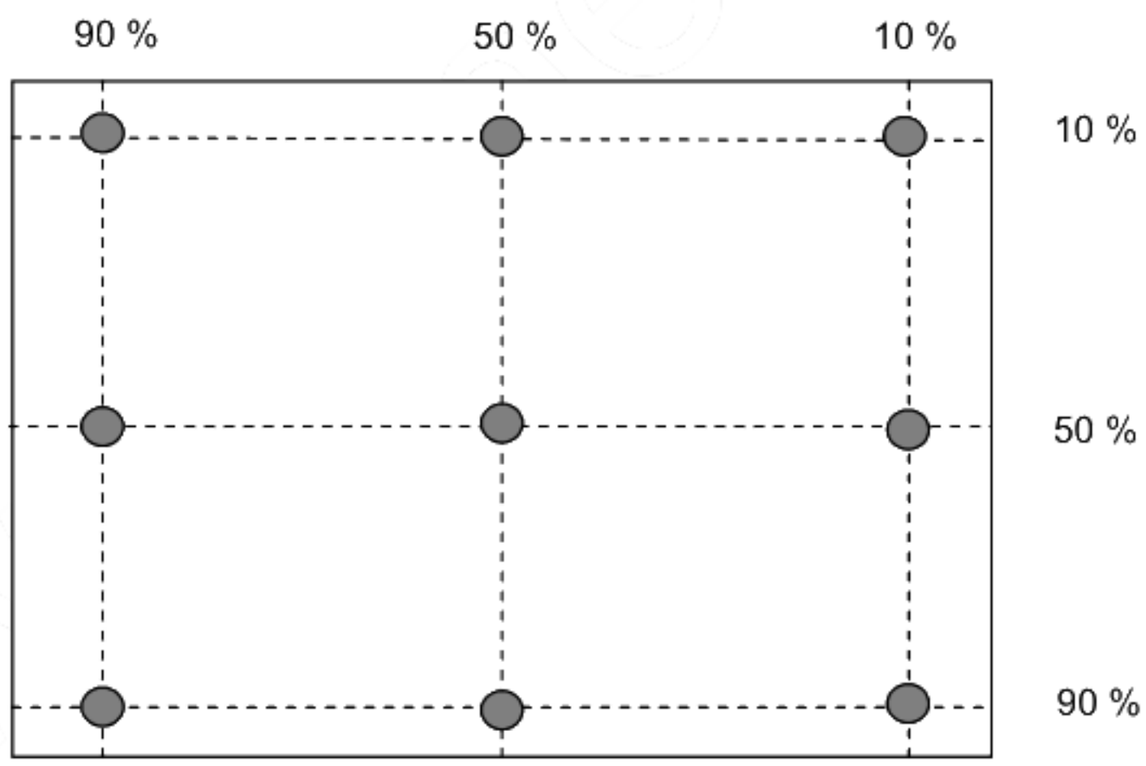

Note 3: The luminance uniformity of 9 points is defined by dividing the maximum luminance values by the minimum test point luminance. And measured by TOPCON SR-3

$$\delta_{W9} = \frac{\text{Minimum Luminance of 9 points}}{\text{Maximum Luminance of 9 points}}$$

Note 4: Measurement method

The LCD module should be stabilized at given temperature for 30 minutes to avoid abrupt temperature change during measuring. In order to stabilize the luminance, the measurement should be executed after lighting Backlight for 30 minutes in a stable, windless and dark room.

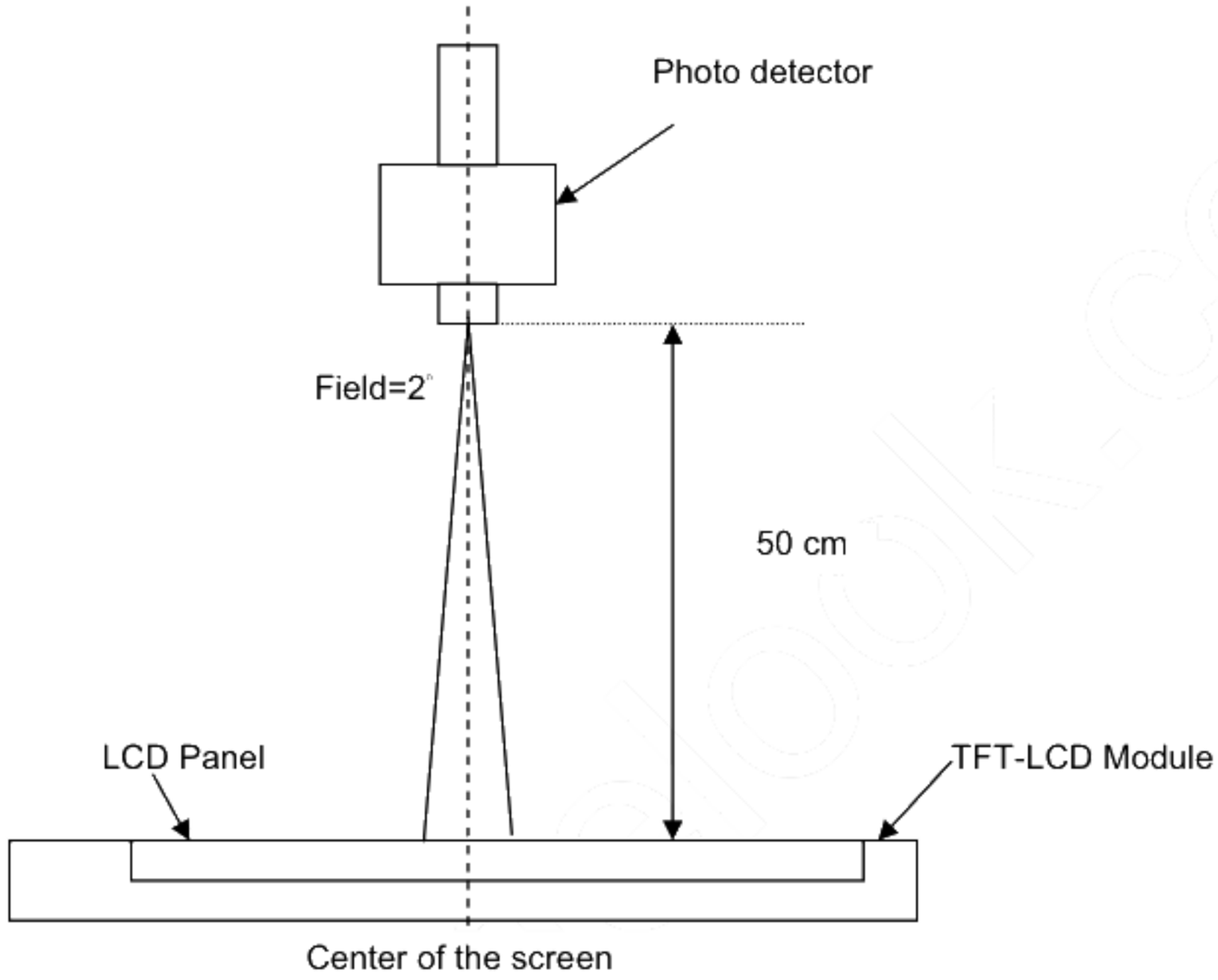

Note 5: Definition of Cross Talk (CT) and measured by TOPCON SR-3

CT = | YB – YA | / YA × 100 (%)

Where

YA = Luminance of measured location without gray level 0 pattern (cd/m2)

YB = Luminance of measured location with gray level 0 pattern (cd/m2)

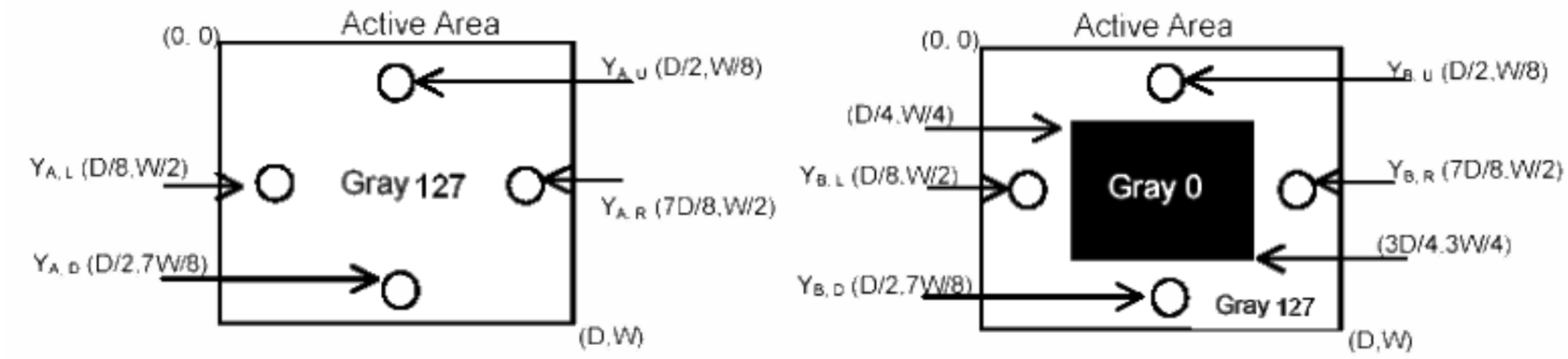

Note 6: Definition of response time, measured by WESTAR TRD-100A

The output signals of photo detector are measured when the input signals are changed from “Full Black” to “Full White” (rising time), and from “Full White” to “Full Black” (falling time), respectively. The response time is interval between the 10% and 90% of amplitudes. Please refer to the figure as below.

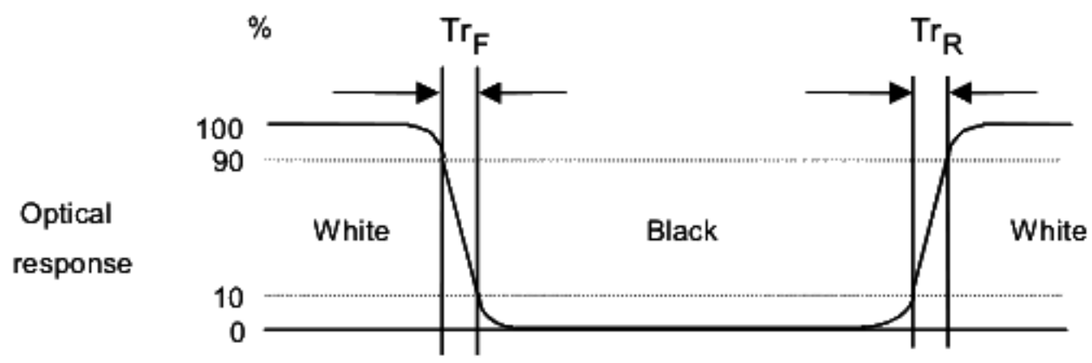

3. Functional Block Diagram

The following diagram shows the functional block of the 19.0 inches Monochrome TFT-LCD Module:

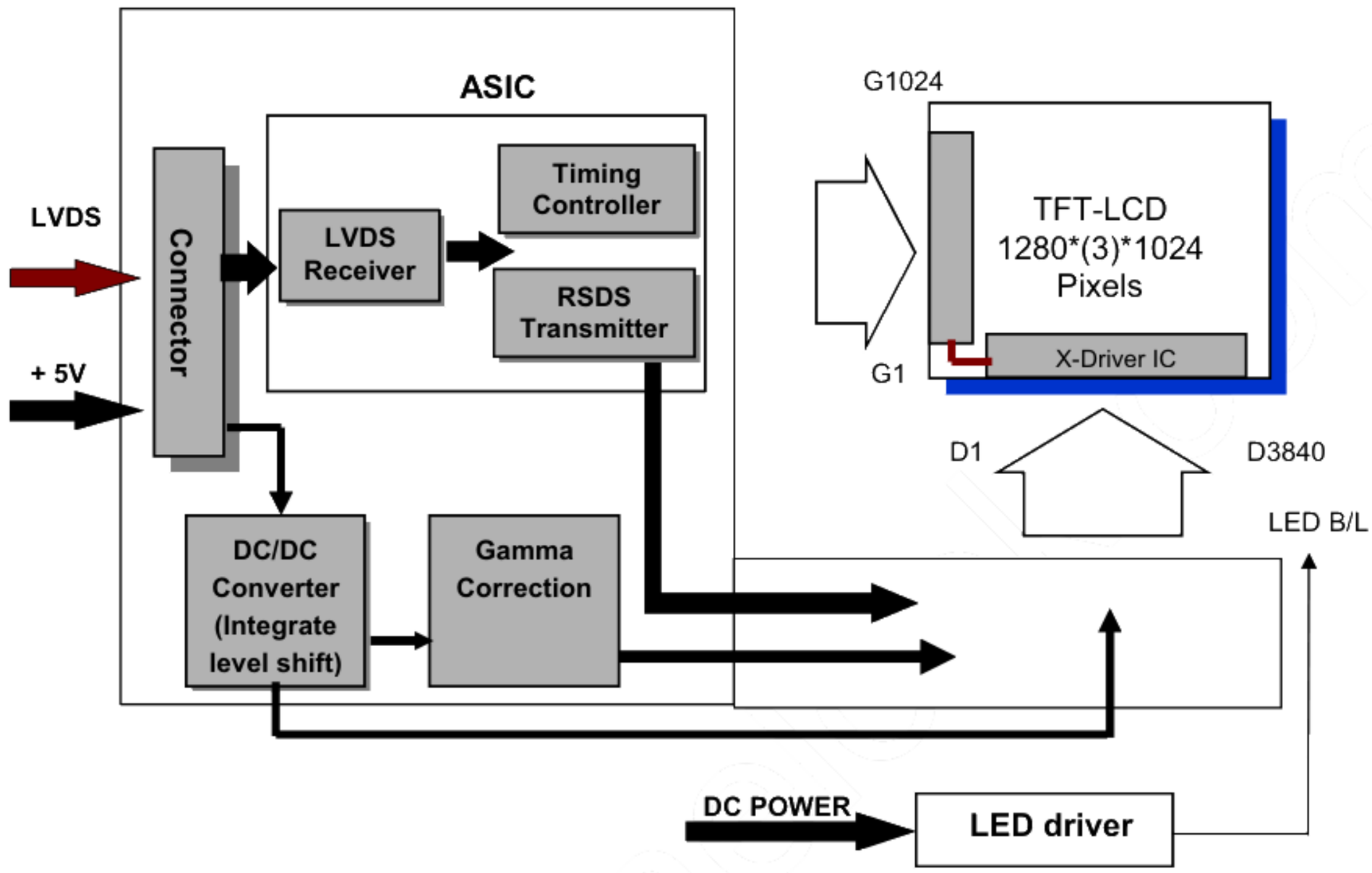

I/F PCB Interface:

FI-XB30SSL-HF15 / MSBKT2407P30HB

Mating Type:

FI-X30HL (Locked Type)

FI-X30H (Unlocked Type)

4. Absolute Maximum Ratings

Absolute maximum ratings of the module are as following:

4.1 Absolute Ratings of TFT LCD Module

Item	Symbol	Min.	Max.	Unit	Conditions
Logic/LCD Drive Voltage	VDD	-0.3	+5.5	[Volt]	Note 1, 2

4.2 Absolute Ratings of Backlight Unit

Item	Symbol	Min.	Max.	Unit	Conditions
LED Power Current	Iled	-	1.7	[A] rms	Note 1, 2

4.3 Absolute Ratings of Environment

Item	Symbol	Min.	Max.	Unit	Conditions
Operating Temperature	TOP	0	+50	[°C]	Note 3 & 4
Operation Humidity	HOP	5	90	[%RH]	
Storage Temperature	TST	-20	+60	[°C]	
Storage Humidity	HST	5	90	[%RH]	

Note 1: With in Ta= 25℃

Note 2: Permanent damage to the device may occur if exceed maximum values

Note 3: For quality performance, please refer to AUO IIS (Incoming Inspection Standard).

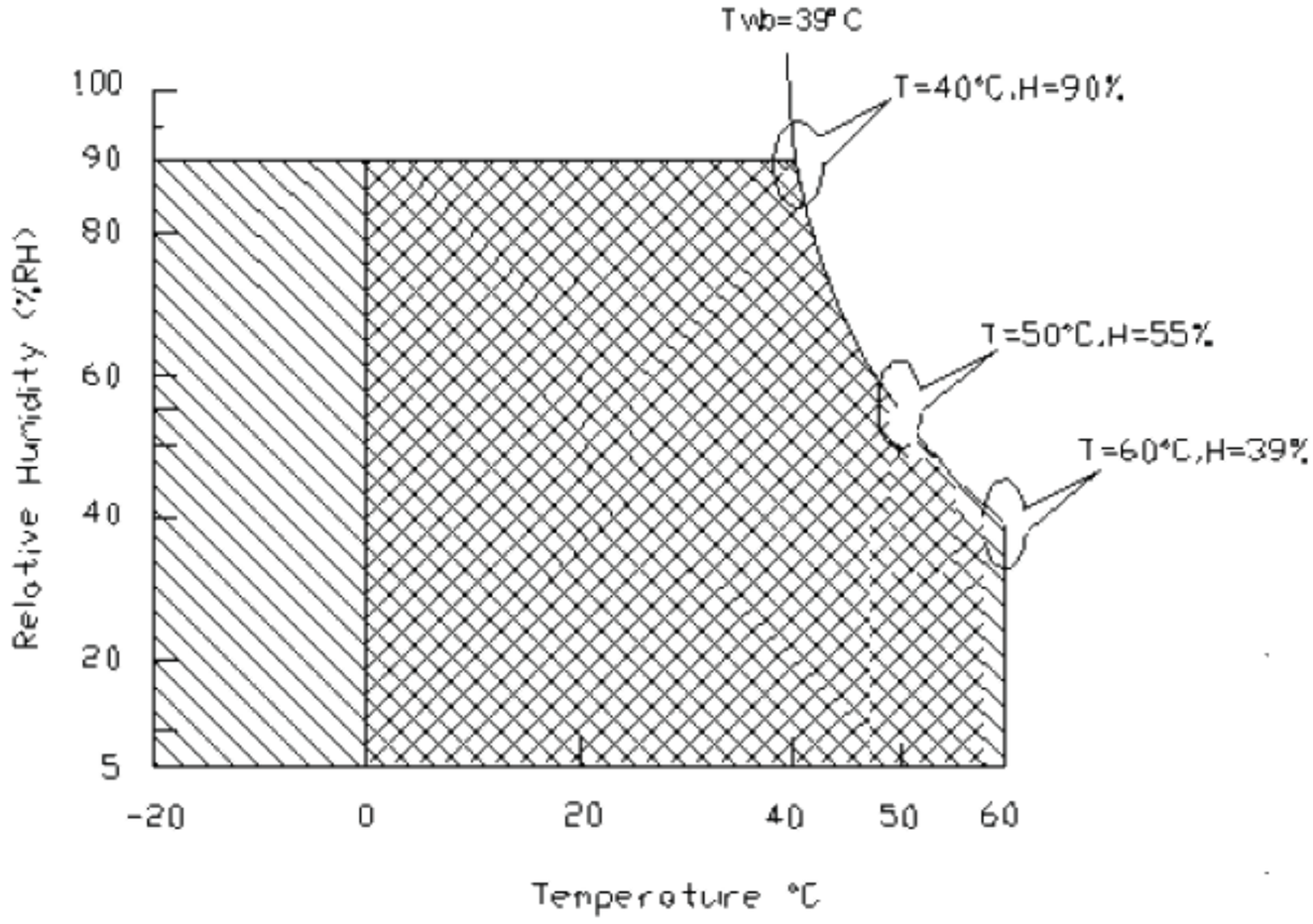

Operating Range Storage Range

Note 4: Operation Temperature + 60°C is defined as panel surface termperature.

5. Electrical characteristics

5.1 TFT LCD Module

5.1.1 Power Specification

Input power specifications are as follows:

Symble	Parameter	Min.	Typ.	Max.	Unit	Condition
VCC	Logic/LCD Drive Voltage	4.5	5.0	5.5	[Volt]	±10%
ICC	Input Current	-	0.7	0.9	[A]	Vin=5V, 2dot checker Pattern, at 60Hz
IRush	Inrush Current	-	2.7	3.4	[A]	Note 2
PCC	VCC Power	-	3.5	4.5	[Watt]	Vin=5V , 2dot checker Pattern, at 60Hz
VCCrp	Allowable Logic/LCD Drive Ripple Voltage	-	–	300	[mV] p-p	With panel loading

Note 1: The 2dot checker Pattern is defined as below:

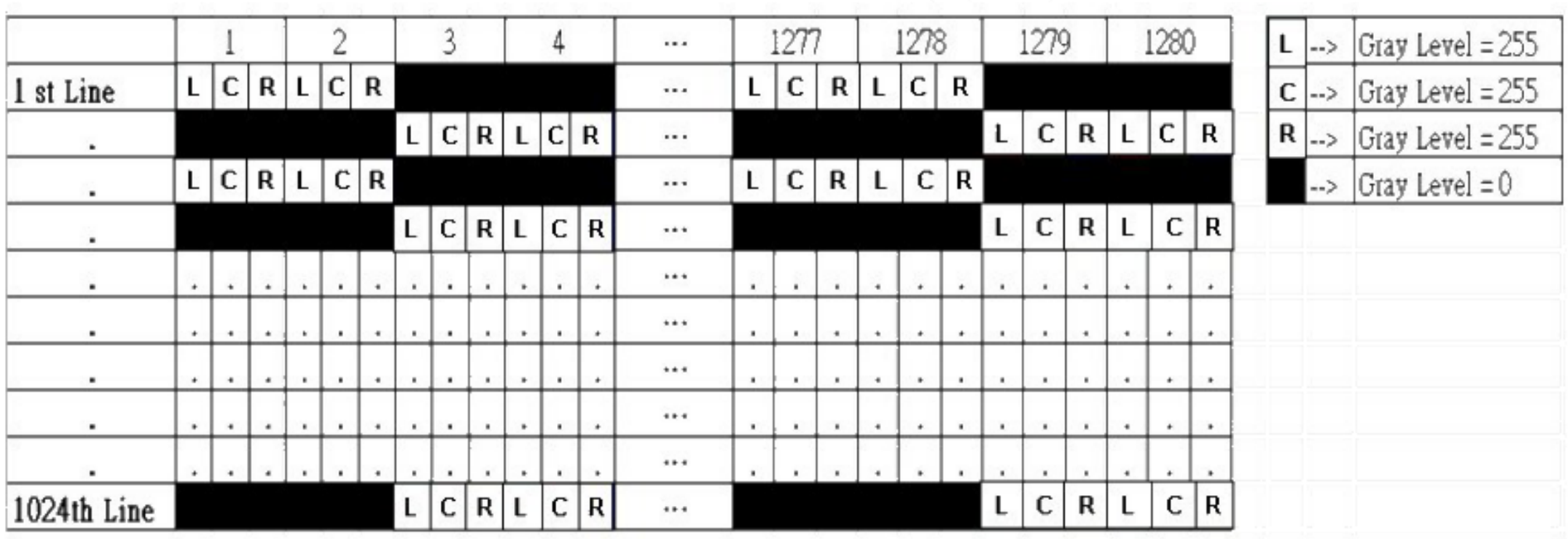

Note2: **L**=Left Sub-Pixel , **C**=Center Sub-Pixel , **R**=Right Sub-Pixel

Note 3: Measurement conditions:

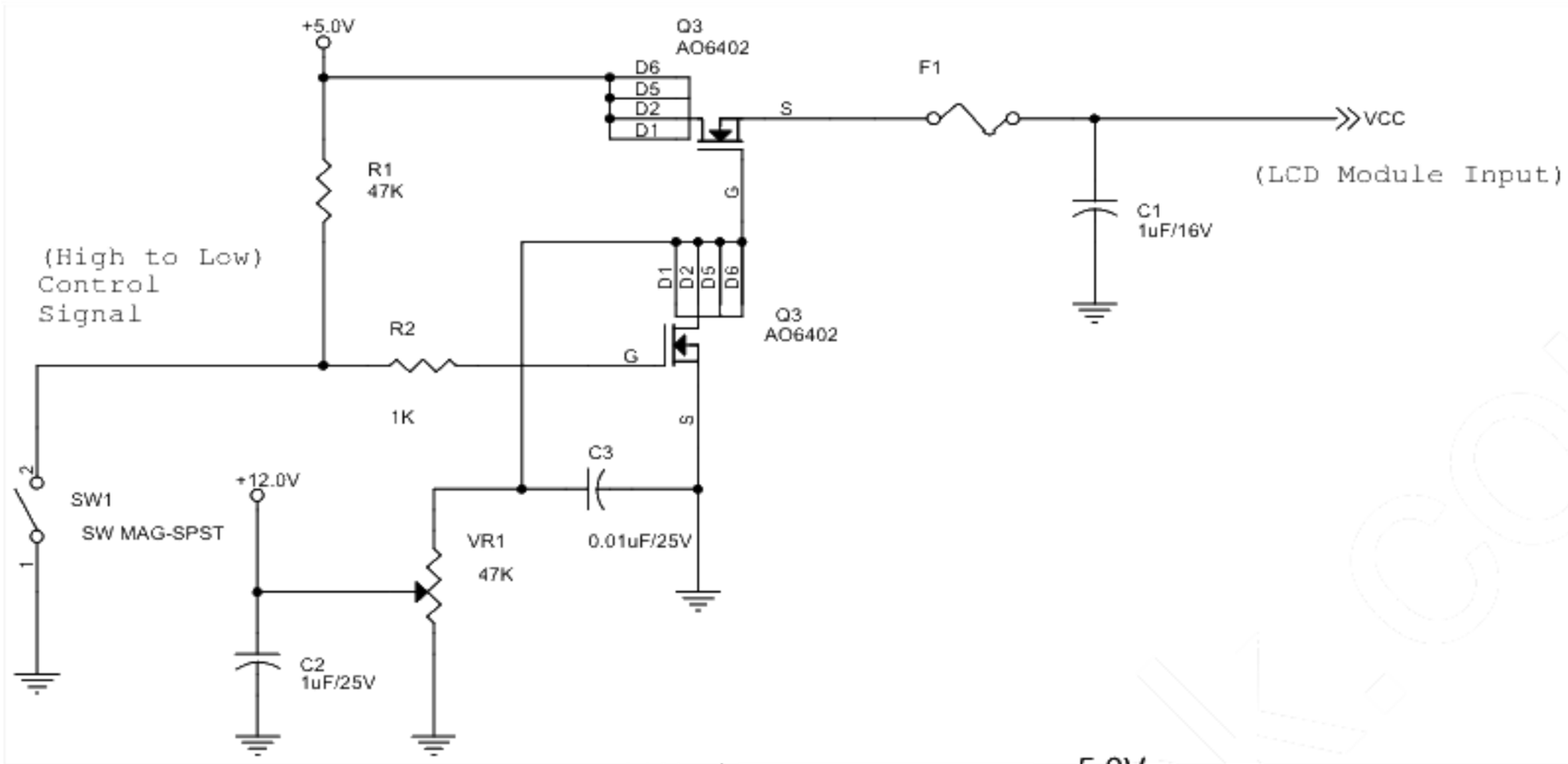

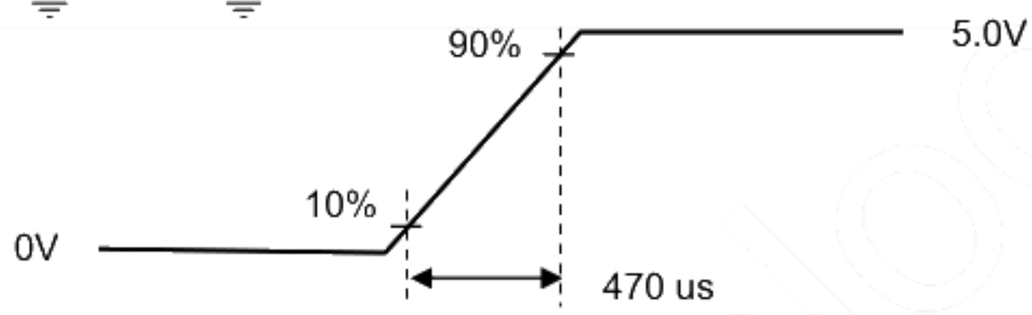

VDD rising time

5.2 Backlight Unit

Following characteristics are measured under a stable condition at 25 °C (Room Temperature):

Symbol	Parameter	Min.	Typ.	Max.	Unit	Remark
VCC	Input Voltage	10.8	12.0	13.2	[Volt]	
I_{VCC}	Input Current		1.26		[A]	100% PWM Duty
P_{VCC}	Power Consumption		15.12	16.63	[Watt]	100% PWM Duty
Irush LED	Inrush Current	-		2.5	[A]	at rising time=470us
Analog Control	Input Voltage	0	-	3.3	V	
F_{PWM}	Dimming Frequency		0.2	20	[kHz]	
	Swing Voltage	3	3.3	5	V	
	Dimming Duty Cycle	10	-	100	%	
I_F	LED Forward Current		80		mA	Ta = 25°C
V_F	LED Forward Voltage	-	-	-	Volt	
		-	3.2	3.75	Volt	I_F =80 mA, Ta = 25°C
		-	-	-		
P_{LED}	LED Power Consumption	-	13.8	16.2	Watt	I_F =80 mA, Ta = 25°C
LED Lifetime		50,000			Hrs	I_F=80 mA, Ta= 25°C

Note 1: Ta means ambient temperature of TFT-LCD module.

Note 2: VCC, Ivcc, P_{VCC} , Irush LED are defined for LED B/L.(100% duty of PWM dimming)

Note 3: I_F, V_F are defined for one channel LED. There are six LED channel in one light bar. P_{LED} is defined for one light bar. There is one light bar in back light unit.

Note 4: If G190EAN01.1 module is driven by high current or at high ambient temperature & humidity condition. The operating life will be reduced.

Note 5: LED life means brightness goes down to 50% initial brightness.

Note 6: Two kind types for adjusting brightness: PWM and Analog.

6. Signal Characteristic

6.1 Pixel Format Image

Following figure shows the relationship of the input signals and LCD pixel format.

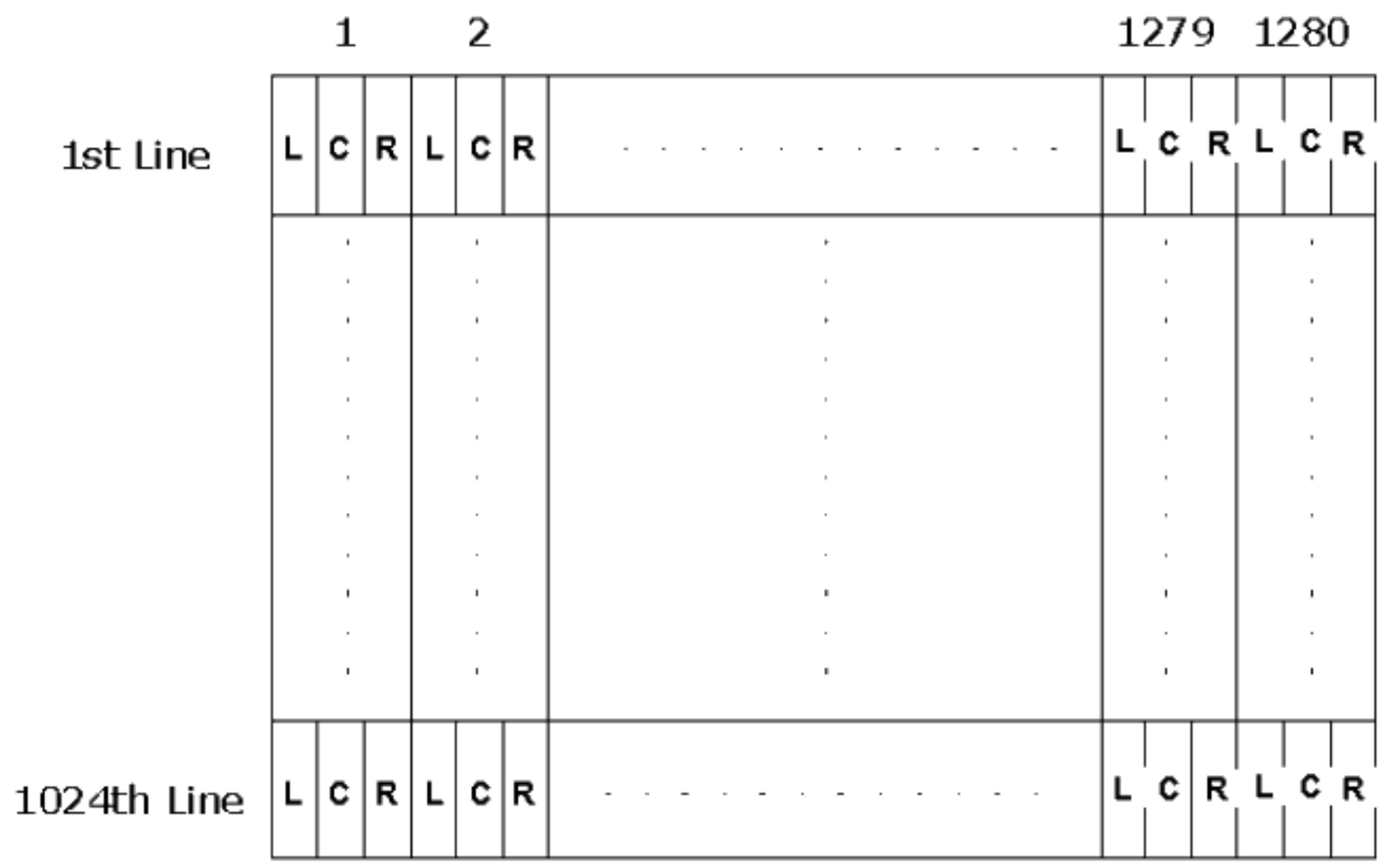

Note: **L**=Left Sub-Pixel , **C**=Center Sub-Pixel , **R**=Right Sub-Pixel

6.2 The Input Data Format

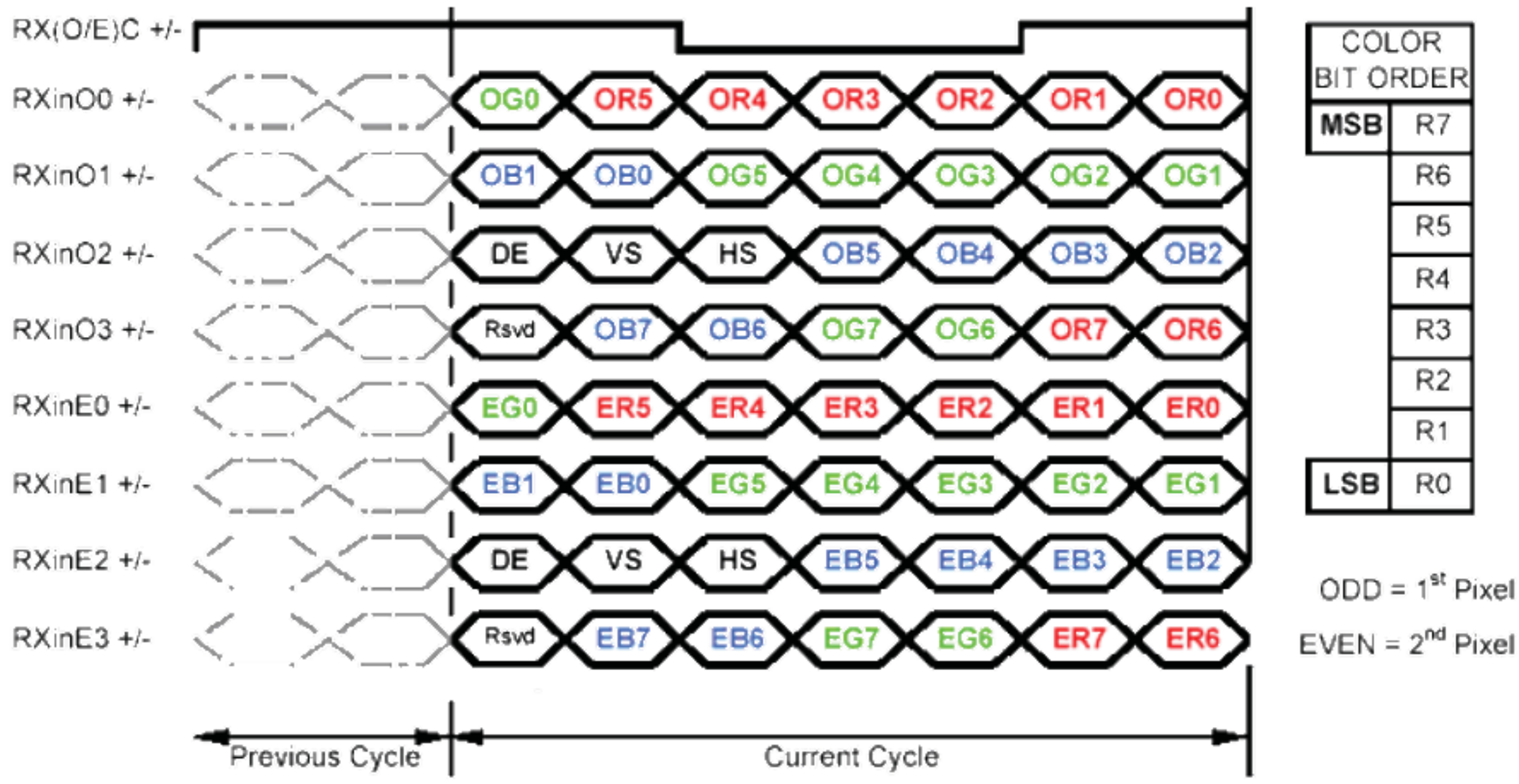

Note1: Normally DE mode only. VS and HS on EVEN channel are not used.
Note2: Please follow VESA.
Note3: 8-bit in
Note4: **R**=Left Sub-Pixel , **G**=Center Sub-Pixel , **B**=Right Sub-Pixel

6.3 Signal Description

The module using a pair of LVDS receiver SN75LVDS82(Texas Instruments) or compatible. LVDS is a differential signal technology for LCD interface and high speed data transfer device. Transmitter shall be SN75LVDS83(negative edge sampling) or compatible. The first LVDS port(RxOxxx) transmits odd pixels while the second LVDS port(RxExxx) transmits even pixels.

PIN #	SIGNAL NAME	DESCRIPTION
1	RxOIN0-	Negative LVDS differential data input (Odd data)
2	RxOIN0+	Positive LVDS differential data input (Odd data)
3	RxOIN1-	Negative LVDS differential data input (Odd data)
4	RxOIN1+	Positive LVDS differential data input (Odd data)
5	RxOIN2-	Negative LVDS differential data input (Odd data, H-Sync,V-Sync,DSPTMG)
6	RxOIN2+	Positive LVDS differential data input (Odd data, H-Sync,V-Sync,DSPTMG)
7	VSS	Power Ground
8	RxOCLKIN-	Negative LVDS differential clock input (Odd clock)
9	RxOCLKIN+	Positive LVDS differential clock input (Odd clock)
10	RxOIN3-	Negative LVDS differential data input (Odd data)
11	RxOIN3+	Positive LVDS differential data input (Odd data)
12	RxEIN0-	Negative LVDS differential data input (Even data)
13	RxEIN0+	Positive LVDS differential data input (Even data)
14	VSS	Power Ground
15	RxEIN1-	Negative LVDS differential data input (Even data)
16	RxEIN1+	Positive LVDS differential data input (Even data)
17	VSS	Power Ground
18	RxEIN2-	Negative LVDS differential data input (Even data)
19	RxEIN2+	Positive LVDS differential data input (Even data)
20	RxECLKIN-	Negative LVDS differential clock input (Even clock)
21	RxECLKIN+	Positive LVDS differential clock input (Even clock)
22	RxEIN3-	Negative LVDS differential data input (Even data)
23	RxEIN3+	Positive LVDS differential data input (Even data)
24	VSS	Power Ground
25	VSS	Power Ground
26	NC	Do not connect (for AUO test)
27	VSS	Power Ground
28	VCC	+5.0V Power Supply
29	VCC	+5.0V Power Supply
30	VCC	+5.0V Power Supply

Note1: Start from left side

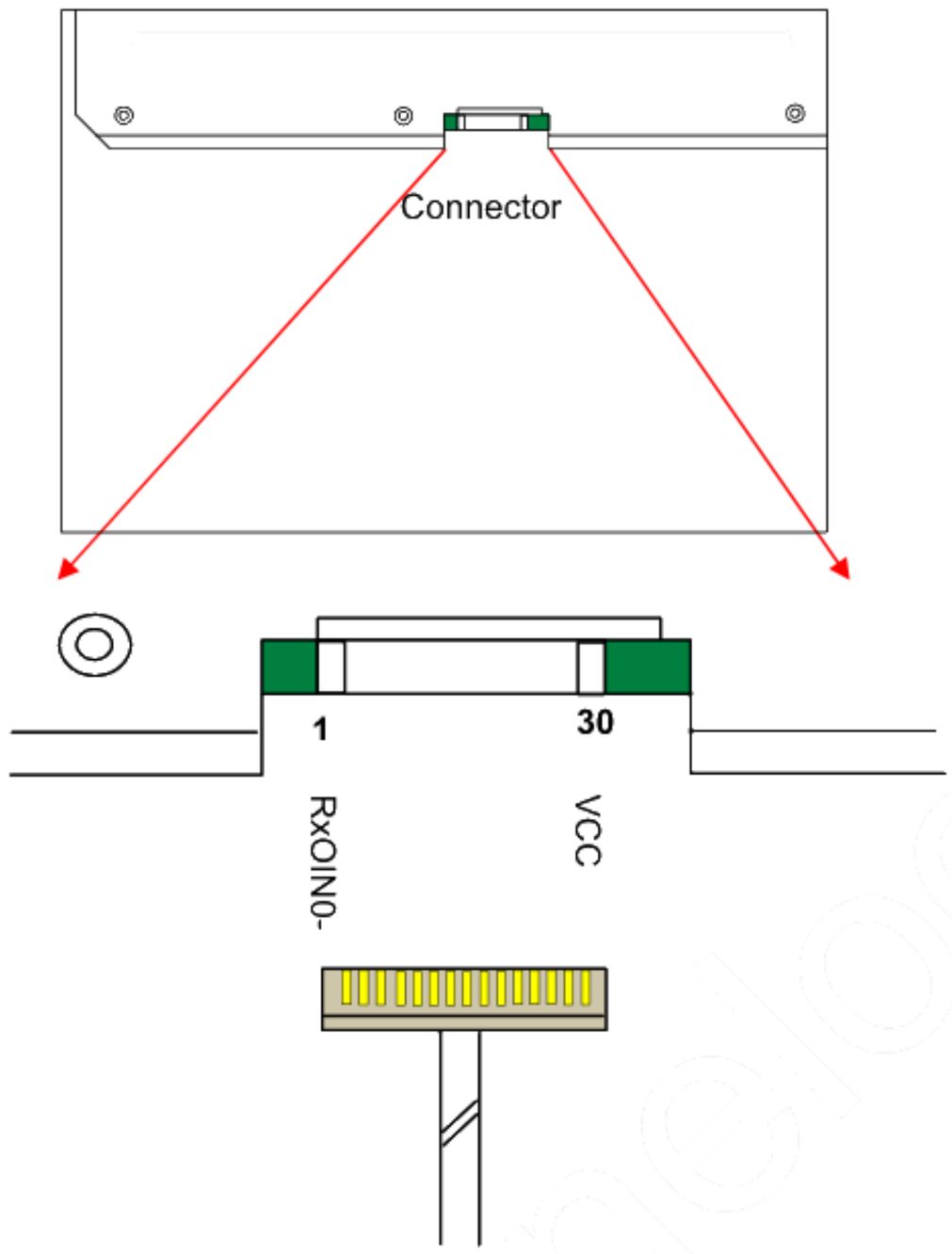

Note2: Input signals of odd and even clock shall be the same timing.

Note3: Please follow VESA.

6.4 Interface Timing

6.4.1 Timing Characteristics

Signal	Item	Symbol	Min	Typ	Max	Unit
Vertical Section	Period	Tv	1032	1066	1150	Th
	Active	Tdisp(v)	1024	1024	1024	Th
	Blanking	Tbp(v)+Tfp(v)+PWvs	8	42	126	Th
Horizontal Section	Period	Th	780	844	2047	Tclk
	Active	Tdisp(h)	640	640	640	Tclk
	Blanking	Tbp(h)+Tfp(h)+PWhs	140	204	-	Tclk
Clock	Period	Tclk	22.2	18.52	14.81	ns
	Frequency	Freq.	45	54	67.5	MHz
Frame Rate	Frequency	1/Tv	50	60	75	Hz

Note : DE mode only

www.lcdtv.bz

6.4.2 Timing Diagram

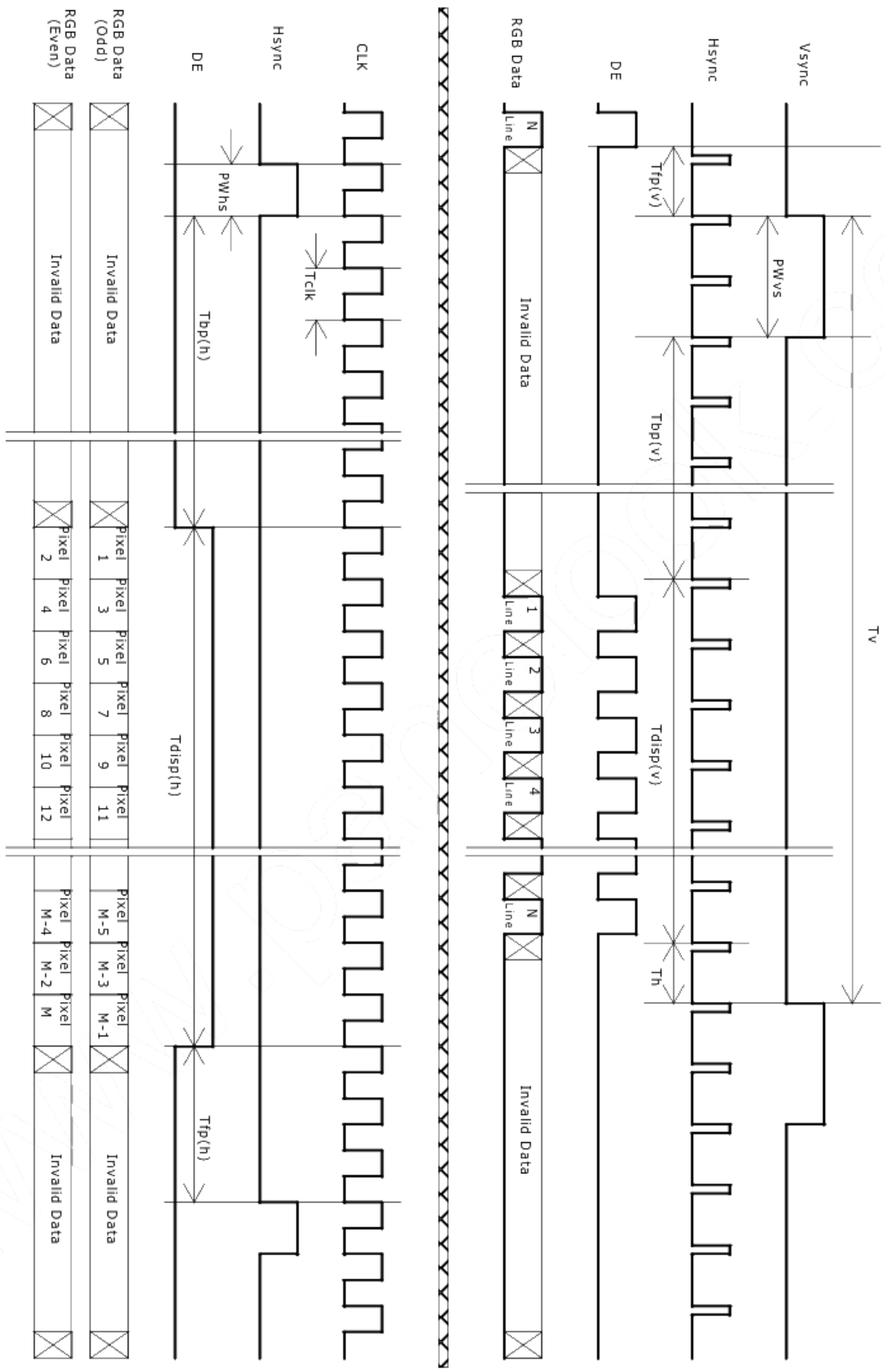

6.5 Power ON/OFF Sequence

VDD power and LED on/off sequence is as follows. Interface signals are also shown in the chart. Signals from any system shall be Hi-Z state or low level when VDD is off.

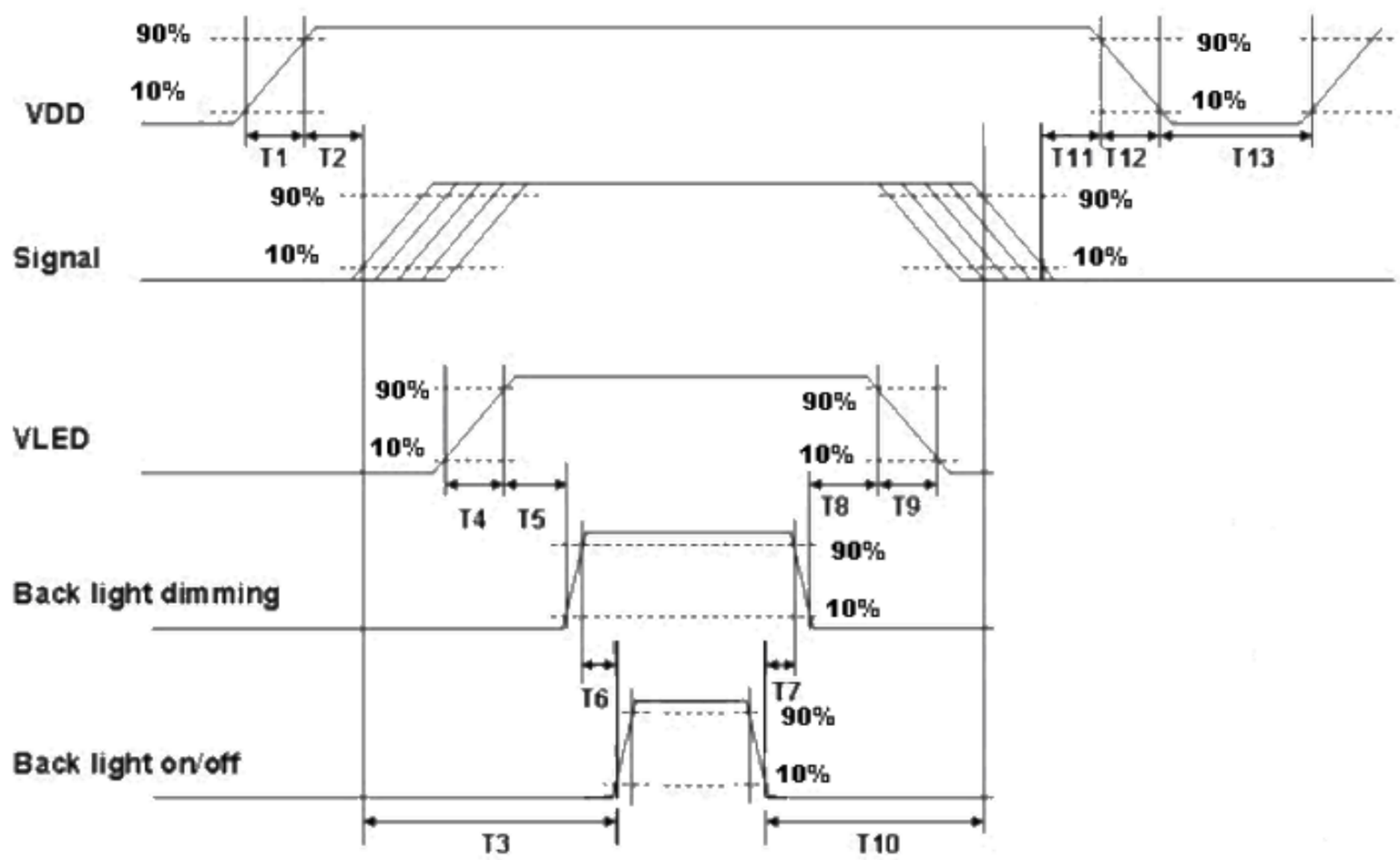

Power Sequence Timing

Power Sequence Timing				
Parameter	Value			Units
	Min.	Typ.	Max.	
T1	0.5	-	10	ms
T2	30	40	50	
T3	200	-	--	
T4	0.5	-	10	
T5	10	-	-	
T6	10	-	-	
T7	0	-	-	
T8	10	-	-	
T9	-	-	10	
T10	110	-	-	
T11	0	16	50	
T12	0		10	
T13	1000	-	-	

7. Connector & Pin Assignment

Physical interface is described as for the connector on module.These connectors are capable of accommodating the following signals and will be following components.

7.1 TFT LCD Module

7.1.1 Connector

Connector Name / Designation	Interface Connector / Interface card
Manufacturer	JAE / STM
Type Part Number	FI-XB30SSLA-HF15 / MSBKT2407P30HB
Mating Housing Part Number	FI-X30HL FI-X30H (Unlocked Type)

7.1.2 Pin Assignment

Pin#	Signal Name	Pin#	Signal Name
1	RxOIN0-	2	RxOIN0+
3	RxOIN1-	4	RxOIN1+
5	RxOIN2-	6	RxOIN2+
7	VSS	8	RxOCLKIN-
9	RxOCLKIN+	10	RxOIN3-
11	RxOIN3+	12	RxEIN0-
13	RxEIN0+	14	VSS
15	RxEIN1-	16	RxEIN1+
17	VSS	18	RxEIN2-
19	RxEIN2+	20	RxECLKIN-
21	RxECLKIN+	22	RxEIN3-
23	RxEIN3+	24	VSS
25	VSS	26	NC
27	VSS	28	VCC
29	VCC	30	VCC

7.2 Backlight Unit

Physical interface is described as for the connector on module. These connectors are capable of accommodating the following signals and will be following components.

Connector Name / Designation	LED Connector / Backlight
Manufacturer	STM
Type Part Number	MS24019RHD
Mating Type Part Number	P24019

7.2.1 Signal for LED connector

Pin #	Symbol	Pin Description
1	+12V	Power +12V
2	+12V	Power +12V
3	+12V	Power +12V
4	NC	NC
5	GND	GND
6	GND	GND
7	GND	GND
8	EN	Enable(0V:disable, 5V:Enable)
9	Dimming (or Analog Control Voltage)	PWM; duty 10%~ 100% (Analog Control Voltage 0~3.3V)

8. Reliability Test

Environment test conditions are listed as following table.

Items	Required Condition	Note
Temperature Humidity Bias (THB)	Ta= 50°C, 80%RH, 300hours	
High Temperature Operation (HTO)	Ta= 50°C, 300hours	
Low Temperature Operation (LTO)	Ta= 0°C, 300hours	
High Temperature Storage (HTS)	Ta= 60°C, 300hours	
Low Temperature Storage (LTS)	Ta= -20°C, 300hours	
Vibration Test (Non-operation)	Acceleration: 1.5 G Wave: Random Frequency: 10 - 200 - 10 Hz Sweep: 30 Minutes each Axis (X, Y, Z)	
Shock Test (Non-operation)	Acceleration: 50 G Wave: Half-sine Active Time: 20 ms Direction: ±X, ±Y, ±Z (one time for each Axis)	
Drop Test	Height: 60 cm, package test	
Thermal Shock Test (TST)	-20 °C /30min, 60/ °C 30min, 100 cycles	1
On/Off Test	On/10sec, Off/10sec, 30,000 cycles	
ESD (Electrostatic Discharge)	Contact Discharge: ± 8KV, 150pF(330Ω) 1sec, 9 points, 25 times/ point.	2
	Air Discharge: ± 15KV, 150pF(330Ω) 1sec 9 points, 25 times/ point.	
Altitude Test	Operation:10,000 ft Non-Operation:30,000 ft	

Note 1: The TFT-LCD module will not sustain damage after being subjected to 100 cycles of rapid temperature change. A cycle of rapid temperature change consists of varying the temperature from -20°C to 60°C, and back again. Power is not applied during the test. After temperature cycling, the unit is placed in normal room ambient for at least 4 hours before power on.

Note 2: According to EN61000-4-2 , ESD class B: Some performance degradation allowed. No data lost. Self-recoverable. No hardware failures.

Note 3:

- Water condensation is not allowed for each test items.
- Each test is done by new TFT-LCD module. Don't use the same TFT-LCD module repeatedly for reliability test.
- The reliability test is performed only to examine the TFT-LCD module capability.
- To inspect TFT-LCD module after reliability test, please store it at room temperature and room humidity for 24 hours at least in advance.
- No function failure occurs.

9. Shipping Label and Packaging

9.1 Shipping Label

The label is on the panel as shown below:

Note 1: For Pb Free products, AUO will add for identification.

Note 2: For RoHS compatible products, AUO will add for identification.

Note 3: For China RoHS compatible products, AUO will add for identification.

Note 4: The Green Mark will be presented only when the green documents have been ready by AUO Internal Green Team.

9.2 Packaging

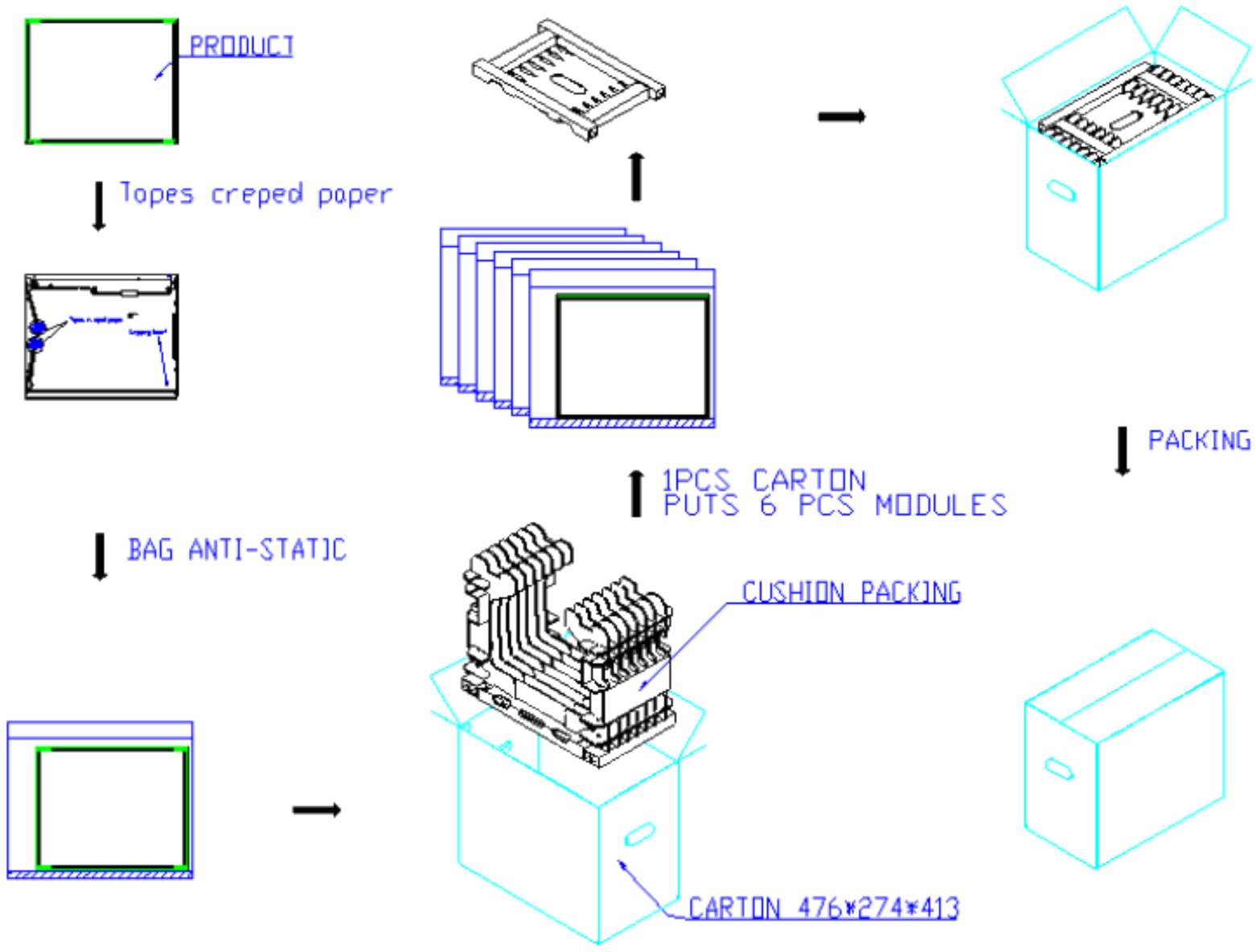

10. Mechanical Characteristic

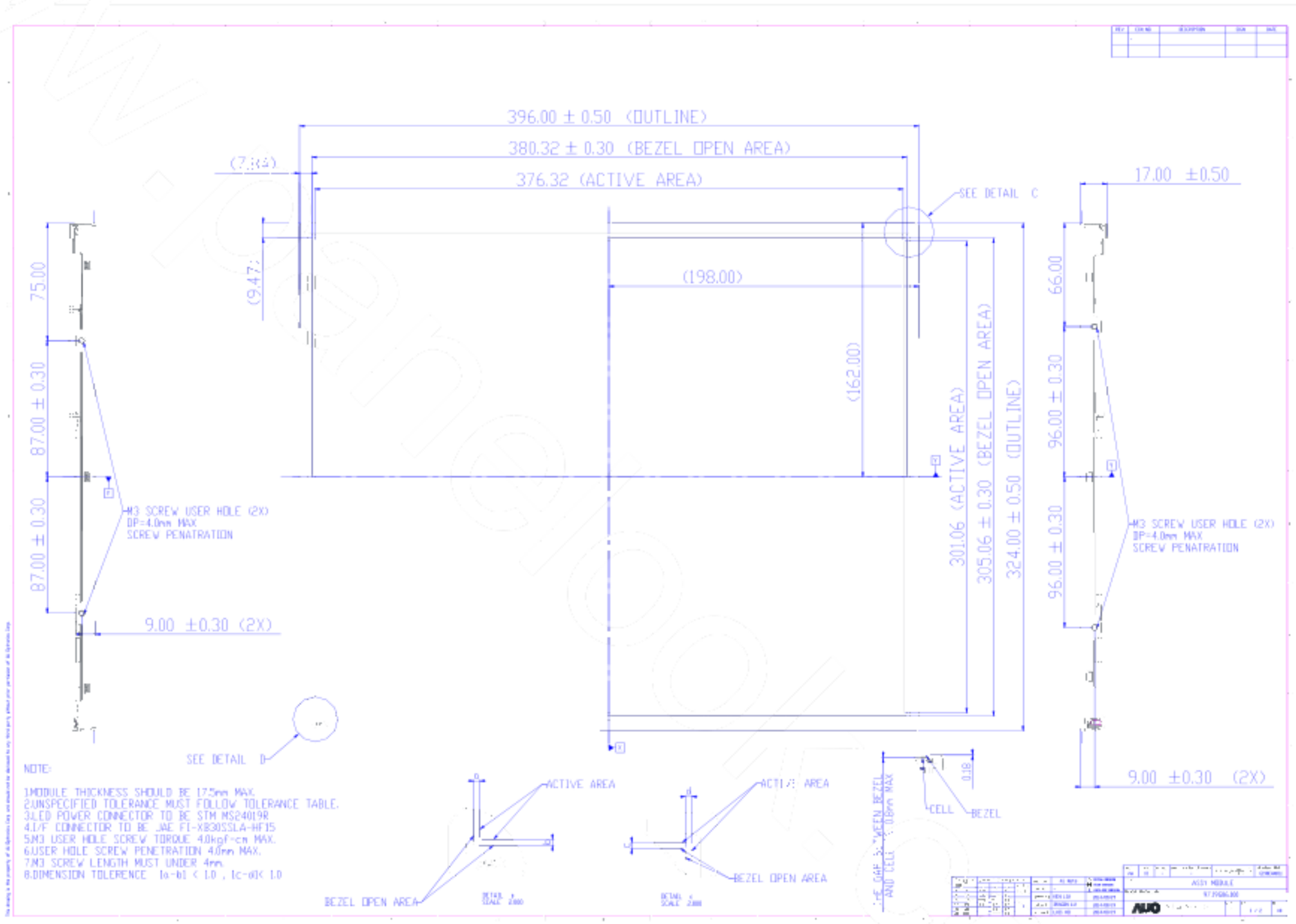

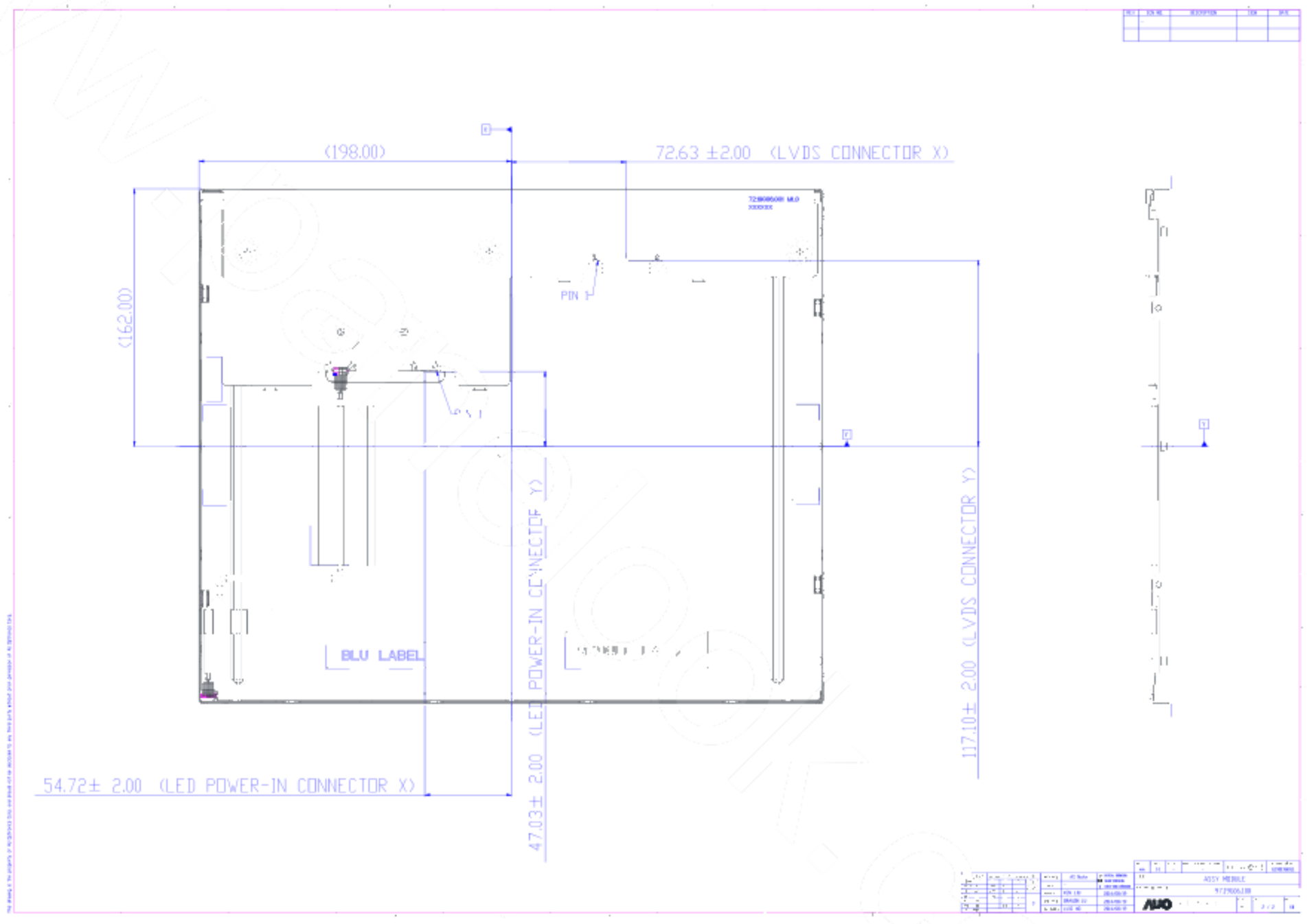
(198.00)
72.63 ±2.00 (LVDS CONNECTOR X)
(162.00)
PIN 1
BLU LABEL
47.03± 2.00 (LED POWER-IN CONNECTOR Y)
117.10± 2.00 (LVDS CONNECTOR Y)
54.72± 2.00 (LED POWER-IN CONNECTOR X)