() Preliminary Specification
(V) Final Specification

Module	19” SXGA TFT-LCD Module
Model Name	G190ETN01.3

Customer	**Date**	**Checked & Approved by**	**Date**
		Vito Huang	2014/06/05
Approved by		**Prepared by**	**Date**
		Vivian Huang	2014/06/05
Note: This Specification is subject to change without notice.		Audio-Video Display Business Unit / AU Optronics corporation	

Contents

Record of Revision

Version & Date	Page	Old Description	New Description
0.0 2014/03/05	All	Frist Preliminary Spec	
1.0 2014/06/05	5		Update 2.1 Display Characteristics
	9		Update 3. Functional Block Diagram
	22		Update 9.2 Backlight Label
	25		Update 11. Outline Drawing

1. Handling Precautions

1) Since front polarizer is easily damaged, please be cautious and not to scratch it.
2) Be sure to turn off power supply when inserting or disconnecting from input connector.
3) Wipe off water drop immediately. Long contact with water may cause discoloration or spots.
4) When the panel surface is soiled, wipe it with absorbent cotton or soft cloth.
5) Since the panel is made of glass, it may be broken or cracked if dropped or bumped on hard surface.
6) To avoid ESD (Electro Static Discharde) damage, be sure to ground yourself before handling TFT-LCD Module.
7) Do not open nor modify the module assembly.
8) Do not press the reflector sheet at the back of the module to any direction.
9) In case if a module has to be put back into the packing container slot after it was taken out from the container, do not press the center of the LED light bar edge. Instead, press at the far ends of the LED light bar edge softly. Otherwise the TFT Module may be damaged.
10) At the insertion or removal of the Signal Interface Connector, be sure not to rotate nor tilt the Interface Connector of the TFT Module.
11) TFT-LCD Module is not allowed to be twisted & bent even force is added on module in a very short time. Please design your display product well to avoid external force applying to module by end-user directly.
12) Small amount of materials without flammability grade are used in the TFT-LCD module. The TFT-LCD module should be supplied by power complied with requirements of Limited Power Source (IEC60950 or UL1950), or be applied exemption.
13) Severe temperature condition may result in different luminance, response time and lamp ignition voltage.
14) Continuous operating TFT-LCD display under low temperature environment may accelerate lamp exhaustion and reduce luminance dramatically.
15) The data on this specification sheet is applicable when LCD module is placed in landscape position.
16) Continuous displaying fixed pattern may induce image sticking. It's recommended to use screen saver or shuffle content periodically if fixed pattern is displayed on the screen.

2. General Description

G190ETN01.3 is a Color Active Matrix Liquid Crystal Display composed of a TFT-LCD panel, a driver circuit, and a backlight system. The screen format is intended to support the SXGA (1280(H) x 1024(V)) screen and 16.7M colors (RGB 6-bits + HiFRC data). All input signals are 2-channel LVDS interface.

2.1 Display Characteristics

The following items are characteristics summary on the table under 25 ℃ condition:

Items	Unit	Specifications
Screen Diagonal	[mm]	482.6 (19.0")
Active Area	[mm]	376.32 (H) x 301.06 (V)
Pixels H x V		1280(x3) x 1024
Pixel Pitch	[mm]	0.294 (per one triad) x 0.294
Pixel Arrangement		R.G.B. Vertical Stripe
Display Mode		Normally White
White Luminance	[cd/m^2]	450 (center, Typ) @60.0mA
Contrast Ratio		1000 : 1 (Typ)
Optical ResponseTime	[msec]	10 ms(Typ, on/off)
Nominal Input Voltage VDD	[Volt]	+3.3 V
Power Consumption	[Watt]	13.5 W (Typ)
Weight	[Grams]	1800 (Typ)
Physical Size (H x V x D)	[mm]	396 (H) x 324 (V) x 11.2(D) (Typ)
Electrical Interface		Dual channel LVDS
Surface Treatment		Glare, Hardness 3H
Support Color		16.7M colors (RGB 6-bit + Hi_FRC)
Temperature Range Operating Storage (Non-Operating)	 [^{o}C] [^{o}C]	 -20 to +70 -20 to +70
RoHS Compliance		RoHS Compliance

2.2 Optical Characteristics

The optical characteristics are measured under stable conditions at 25℃ (Room Temperature).

Item	Unit	Conditions	Min.	Typ.	Max.	Note
Viewing Angle	[degree]	Horizontal (Right) CR = 10 (Left)	75 75	85 85	-	1
		Vertical (Up) CR = 10 (Down)	70 70	80 80	-	
Contrast Ratio		Normal Direction	600	1000	-	
Optical Response Time	[msec]	Raising Time (TrR)	-	7	12	2
		Falling Time (TrF)	-	3	8	
		Rising + Falling	-	10	20	
Color / Chromaticity Coordinates (CIE)		Red x	0.590	0.640	0.690	
		Red y	0.294	0.344	0.394	
		Green x	0.277	0.327	0.377	
		Green y	0.574	0.624	0.674	
		Blue x	0.105	0.155	0.205	
		Blue y	0.004	0.054	0.104	
		White x	0.263	0.313	0.363	
		White y	0.279	0.329	0.379	
Central Luminance	[cd/m^2]		280	350	-	3
Luminance Uniformity	[%]	14 Points	70	75	-	4,5
NTSC	[%]			72		

Optical Equipment: BM-5A, BM-7, PR880, or equivalent

Note 1: Definition of viewing angle

Viewing angle is the measurement of contrast ratio≧10, or ≧5, at the screen center, over a 180° horizontal and 180° vertical range (off-normal viewing angles). The 180° viewing angle range is broken down as follows; 90° (θ) horizontal left and right and 90° (Φ) vertical, high (up) and low (down). The measurement direction is typically perpendicular to the display surface with the screen rotated about its center to develop the desired measurement viewing angle.

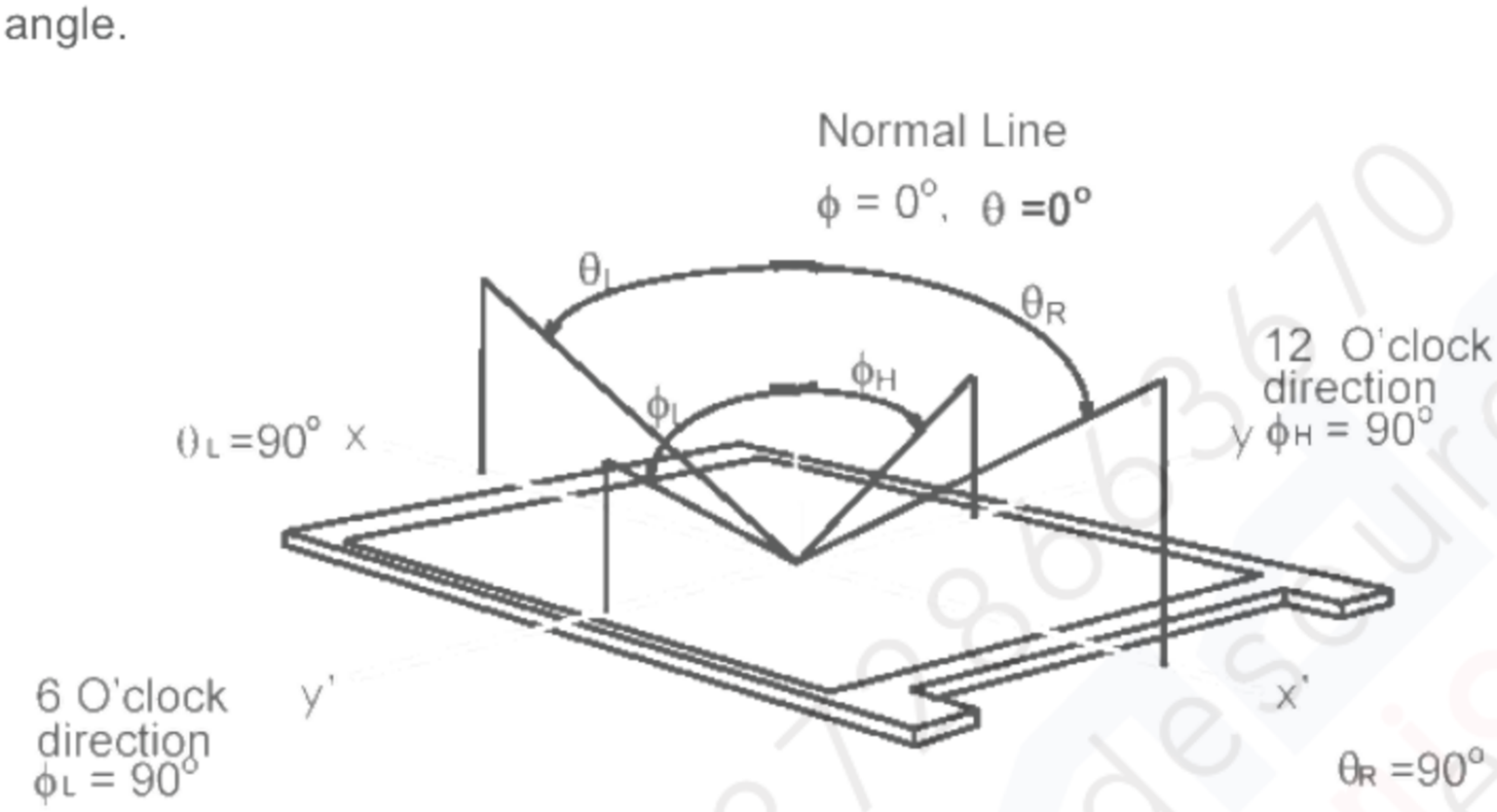

Note 2: Definition of response time:

The output signals of photo detector are measured when the input signals are changed from “Full Black” to “Full White” (rising time), and from “Full White” to “Full Black” (falling time), respectively. The response time is interval between the 10% and 90% of amplitudes. Please refer to the figure as below.

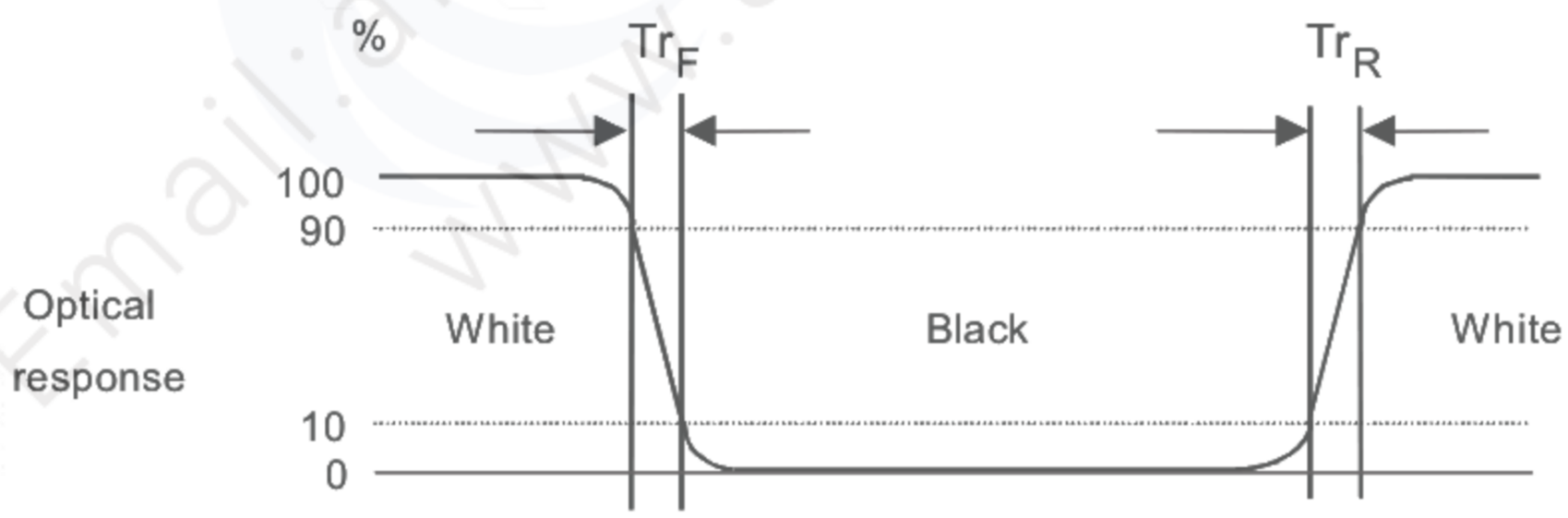

Note 3: Measurement method

The LCD module should be stabilized at given temperature for 30 minutes to avoid abrupt temperature change during measuring. In order to stabilize the luminance, the measurement should be executed after lighting Backlight for 30 minutes in a stable, windless and dark room.

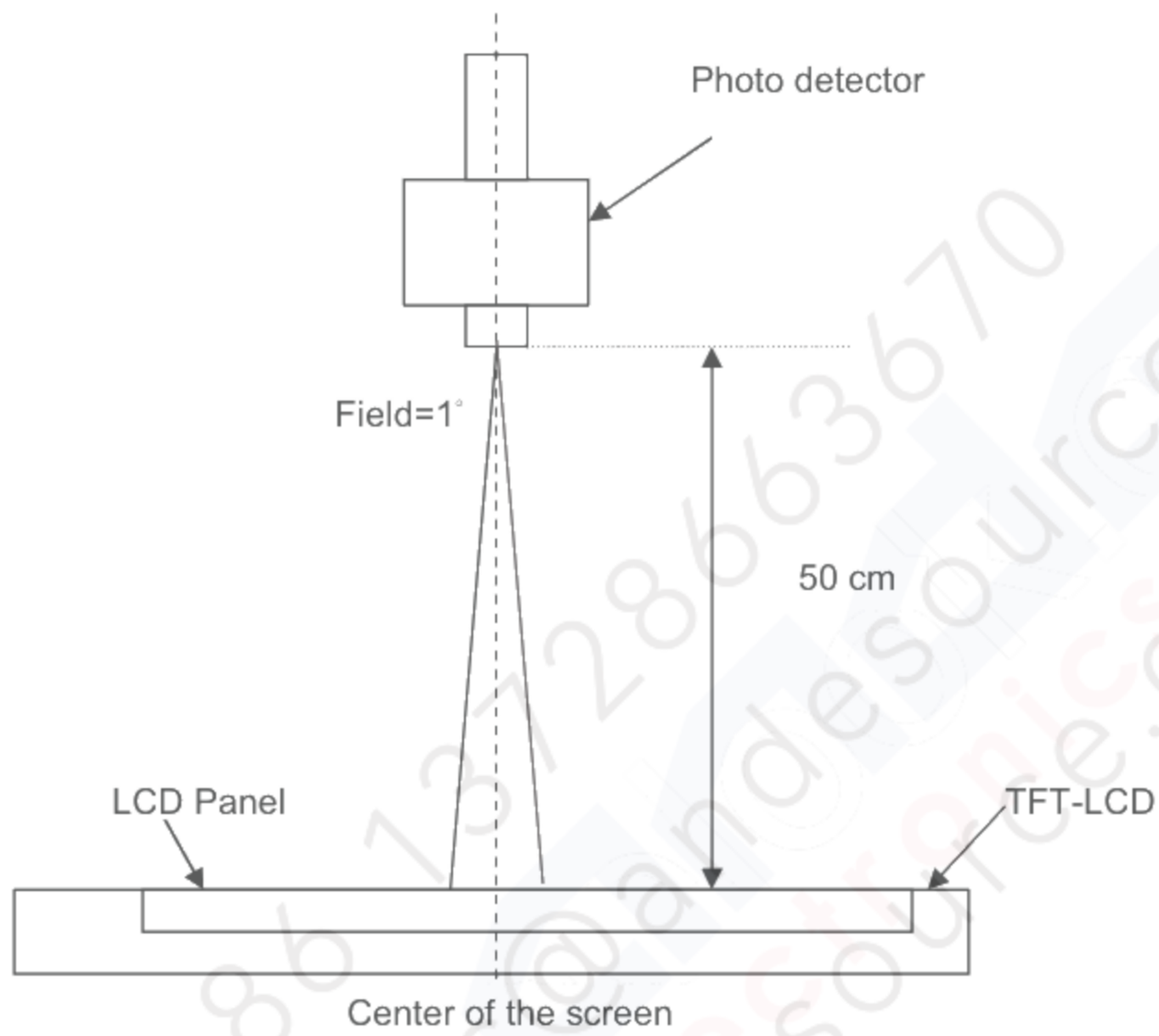

Note 4: 14 points position

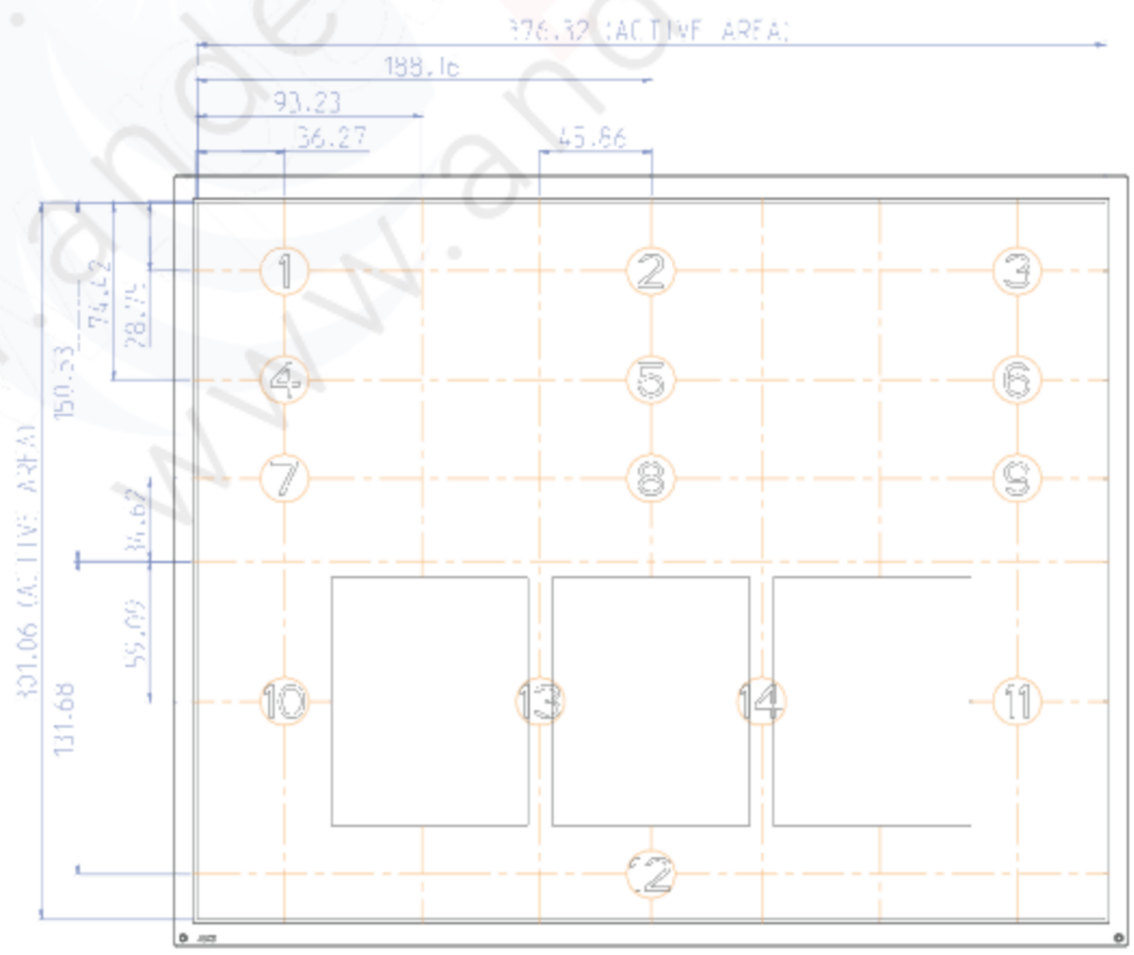

Note 5: $$\text{Uniformity} = \frac{\text{Minimum Luminance in 9 points (1 - 9)}}{\text{Maximum Luminance in 9 Points (1 - 9)}}$$

3. Functional Block Diagram

The following diagram shows the functional block of the 19.0 inches wide Color TFT-LCD Module:

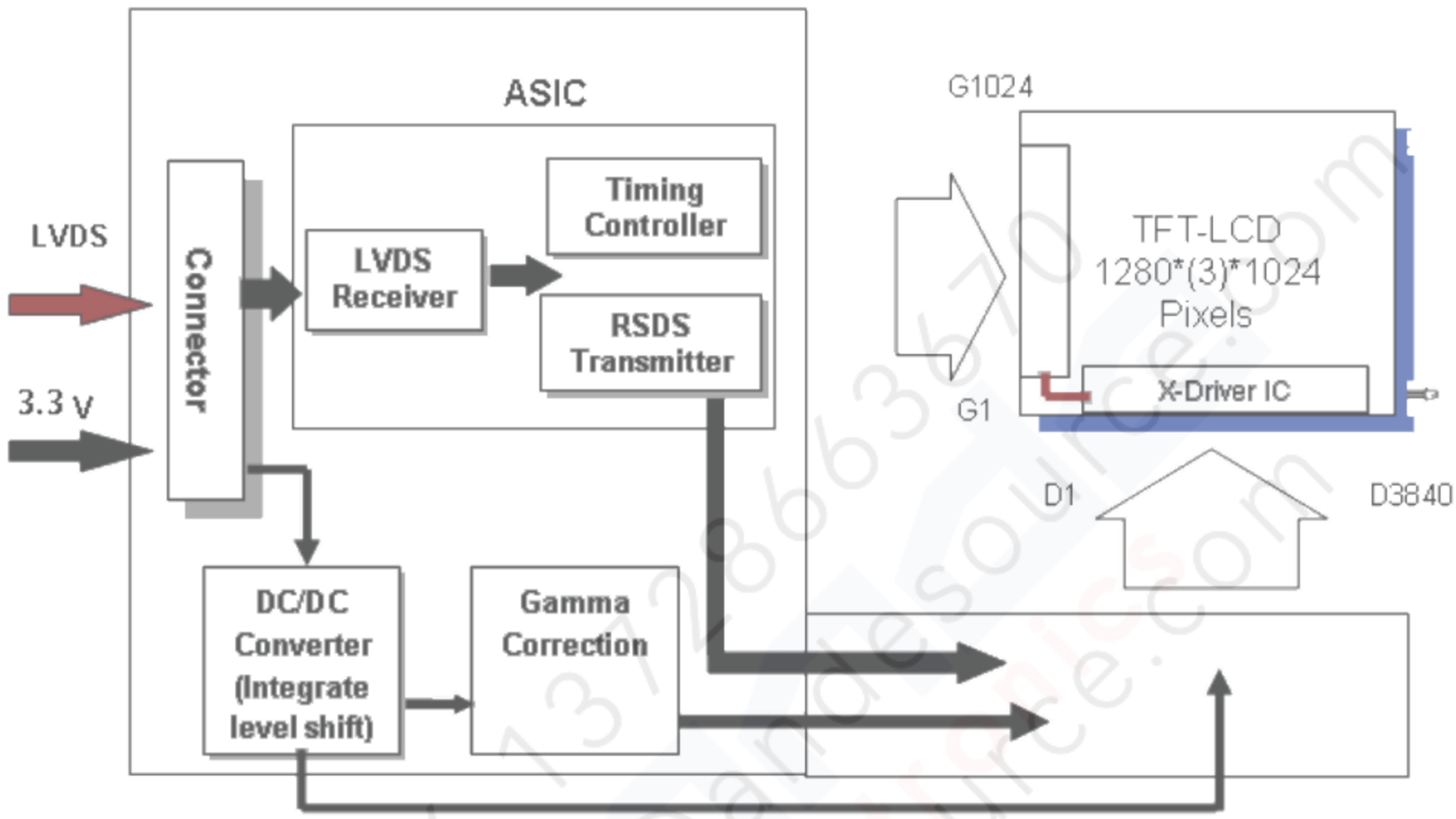

4. Absolute Maximum Ratings

Absolute maximum ratings of the module are as following:

4.1 TFT LCD Module

Item	Symbol	Min	Max	Unit	Conditions
Logic/LCD Drive Voltage	VDD	-0.3	+4.0	[Volt]	***Note 1,2***

4.2 Absolute Ratings of Environment

Item	Symbol	Min.	Max.	Unit	Conditions
Operating Temperature (Tgs)	TOP	-20	+70	[°C]	Note 3
Operation Humidity	HOP	5	95	[%RH]	Note 3
Storage Temperature (Ta)	TST	-20	+70	[°C]	
Storage Humidity	HST	5	95	[%RH]	

Note 1: With in Ta (25℃)
Note 2: Permanent damage to the device may occur if exceeding maximum values
Note 3: Temperature and relative humidity range are shown as the below figure.

1. 95% RH Max (Ta ≦39℃)
2. Max wet-bulb temperature at 39℃ or less. (Ta ≦39℃)
3. No condensation

Note 4: Function Judged only

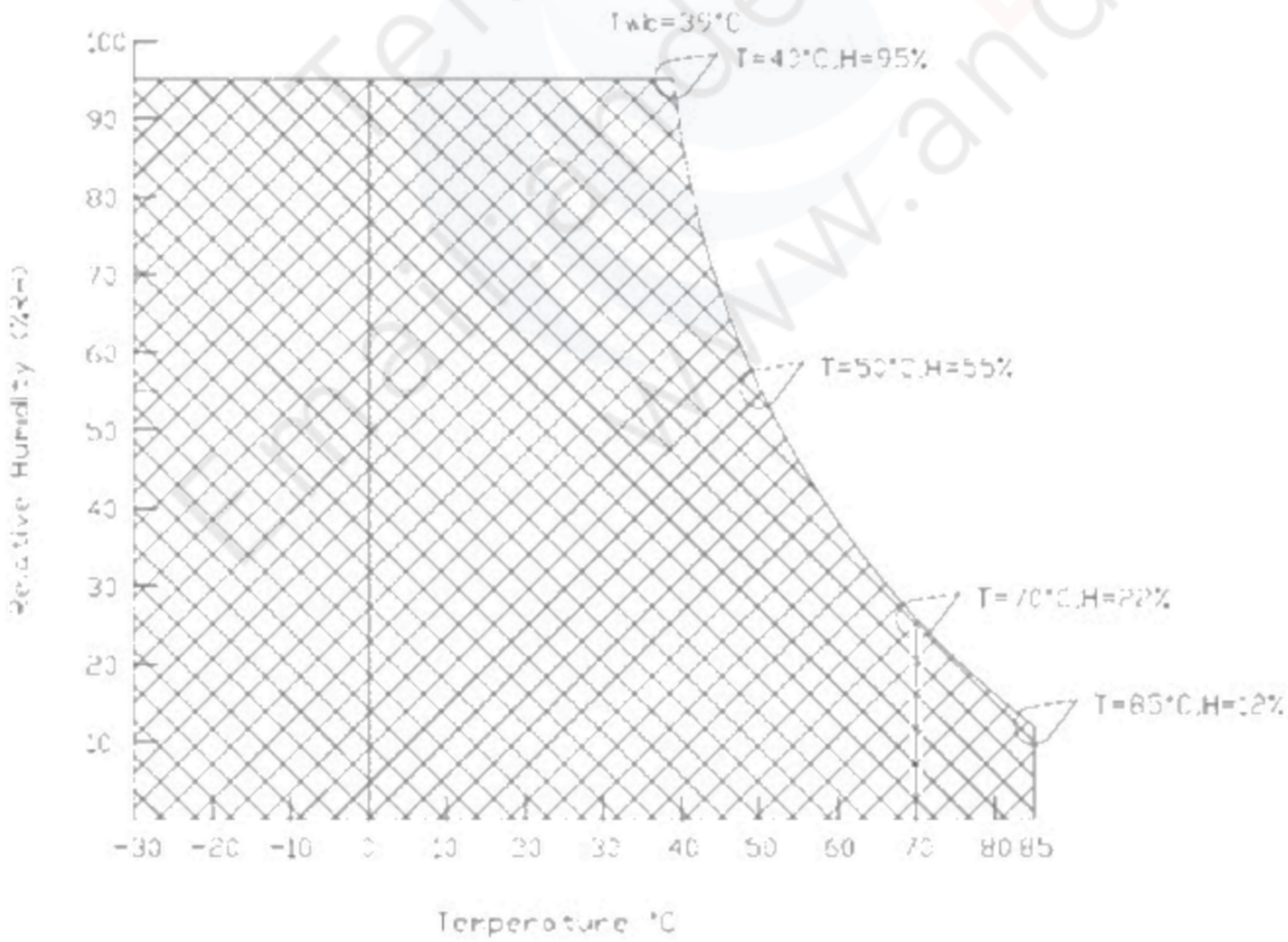

5. Electrical Characteristics

5.1 TFT LCD Module

5.1.1 Power Specification

Input power specifications are as follows:

Symbol	Parameter	Min	Typ	Max	Unit	Conditions
VDD	Logic/LCD Drive Voltage	3.0	3.3	3.6	[Volt]	+/-10%
IDD	Input Current	-	1	1.2	[A]	VDD= 3.3V, All Black Pattern At 75Hz
PDD	VDD Power	-	3.3	3.96	[Watt]	VDD= 3.3V, All Black Pattern At 75Hz
IRush	Inrush Current	-	-	3.0	[A]	Note 1
VDDrp	Allowable Logic/LCD Drive Ripple Voltage	-	-	100	[mV] p-p	VDD= 3.3V, All Black Pattern At 75Hz

Note 1: Measurement conditions:

The duration of rising time of power input is 470us.

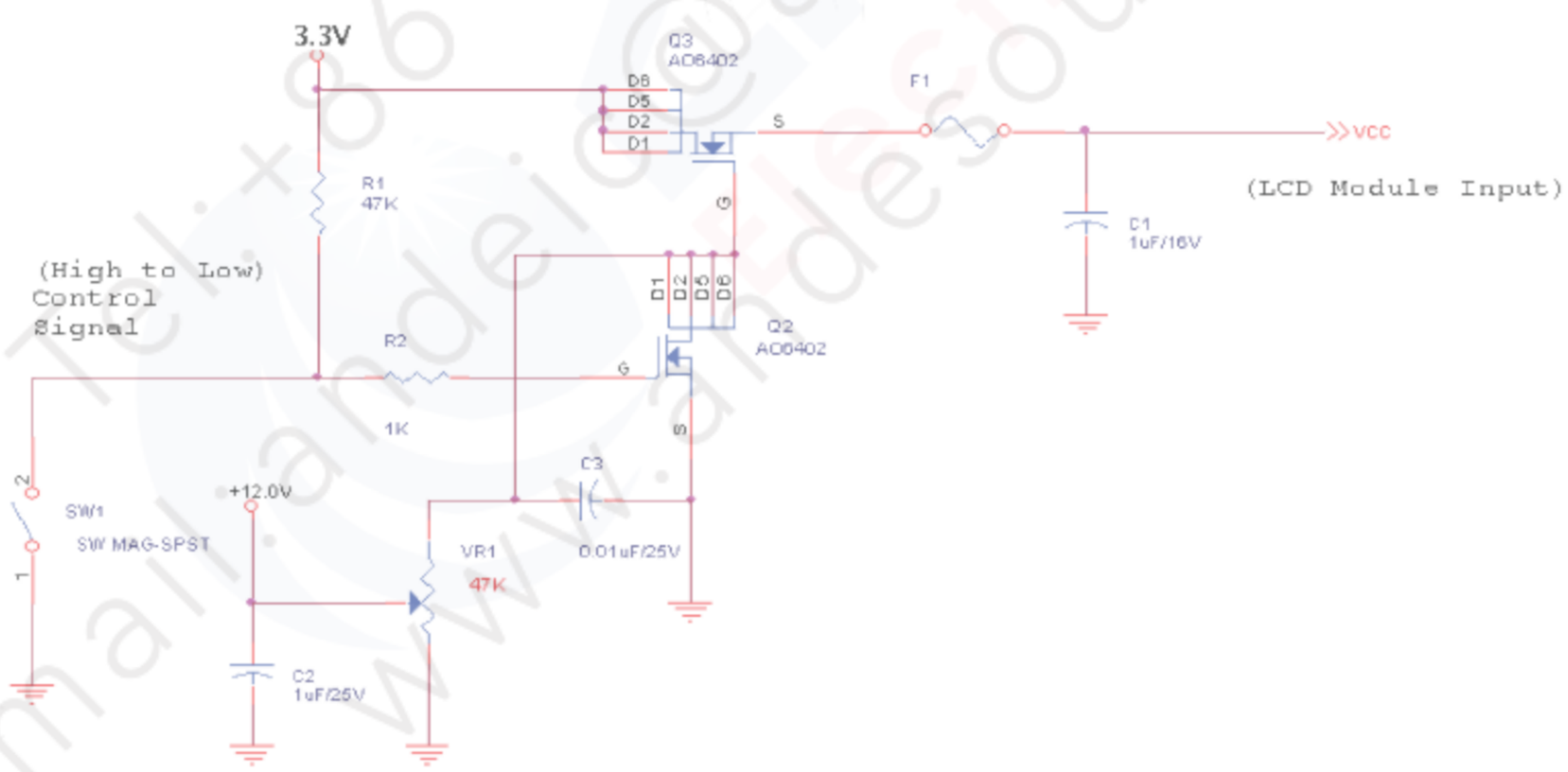

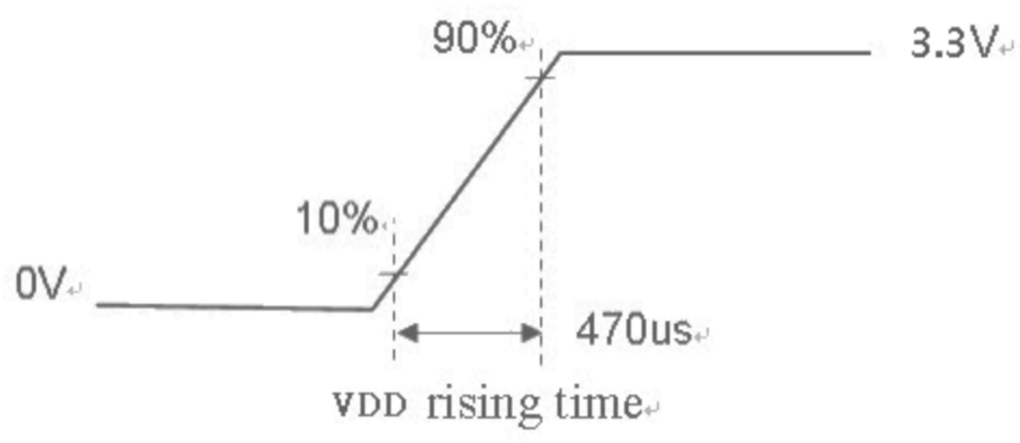

5.1.2 Signal Electrical Characteristics

Input signals shall be low or Hi-Z state when VDD is off. Please refer to specifications of SN75LVDS82DGG (Texas Instruments) in detail.

Each signal characteristics are as follows;

Symbol	Parameter	Min	Typ	Max	Units	Condition
V_{TH}	Differential Input High Threshold	-	-	+100	[mV]	V_{CM} = 1.2V ***Note 1***
V_{TL}	Differential Input Low Threshold	-100	-	-	[mV]	V_{CM} = 1.2V ***Note 1***
$\lvert V_{ID} \rvert$	Input Differential Voltage	100	400	600	[mV]	***Note 1***
V_{CM}	Differential Input Common Mode Voltage	+1.0	+1.2	+1.5	[V]	V_{TH}-V_{TL} = 200mV (max) ***Note 1***

Note1: LVDS Signal Waveform

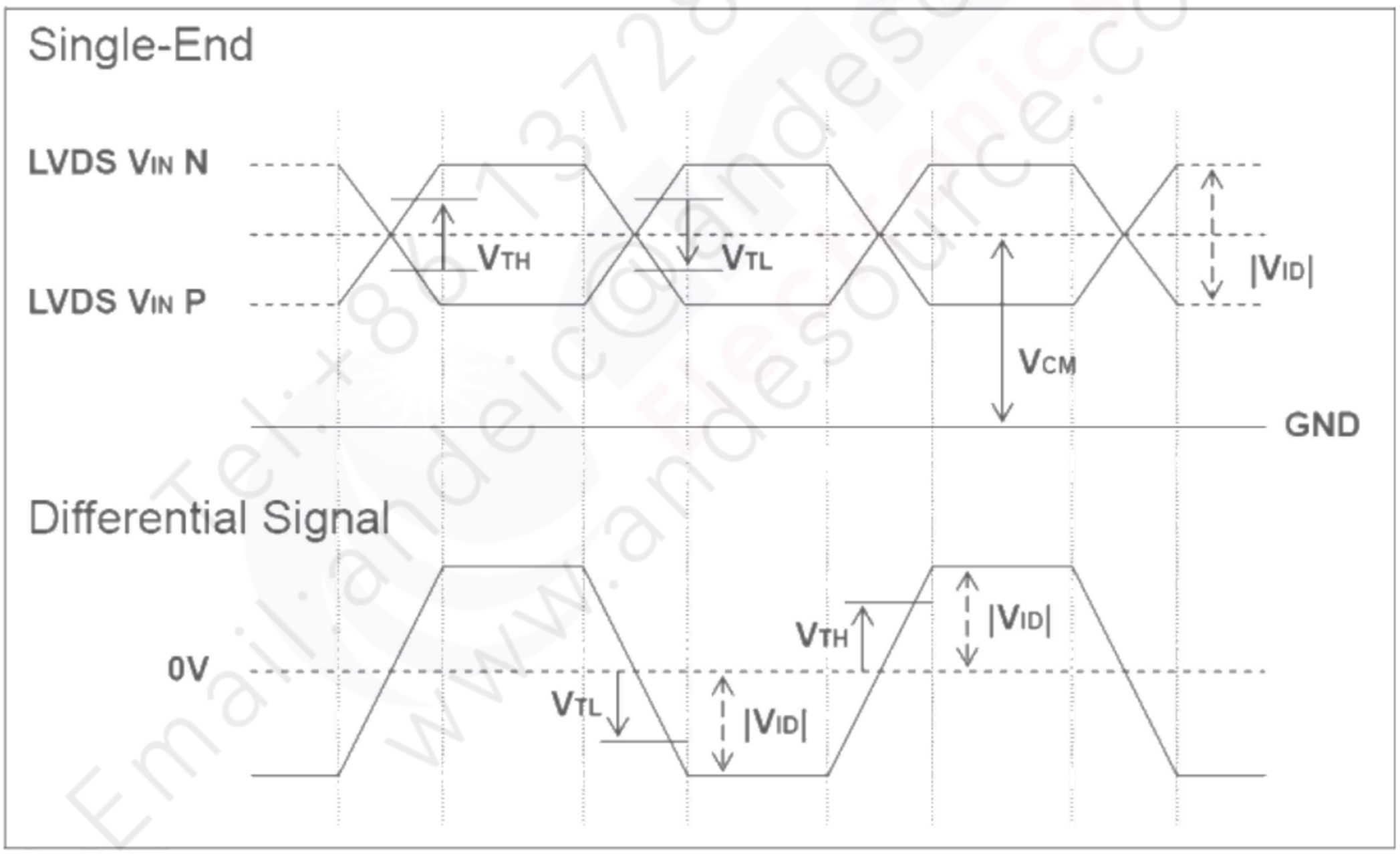

5.1.3 Backlight Unit

Parameter guideline for LED driving is under stable conditions at 25℃ (Room Temperature):

Symbol	Parameter	Min.	Typ.	Max.	Unit	Note
IR_{LED}	LED Operation Current	-	60	–	[mA] Note 1	Operating with fixed driving current
V_{LB}	Light Bar Operation Voltage (for reference)	-	42.3	47.6	[Volt] Note 2	
P_{BLU}	BLU Power consumption (for reference)	-	10.2	-	[Watt]	
LT_{LED}	LED life Time (Typical)	25,000	30,000	-	[Hour] Note 3	

Note 1 :The specified current is input LED chip 100% duty current.

Note 2 : The value showed in the table is one light bar's operation voltage.

Note 3 : Definition of life time : brightness becomes 50% of its original value. The minimum life time of LED unit is on the condition of IR_{LED} = 60mA and 25±2℃ (Room temperature).

Note 4: Each LED light bar consists of 48 pcs LED package (4 strings x 12 pcs / string).

6. Signal Characteristic

6.1 Pixel Format Image

Following figure shows the relationship of the input signals and LCD pixel format.

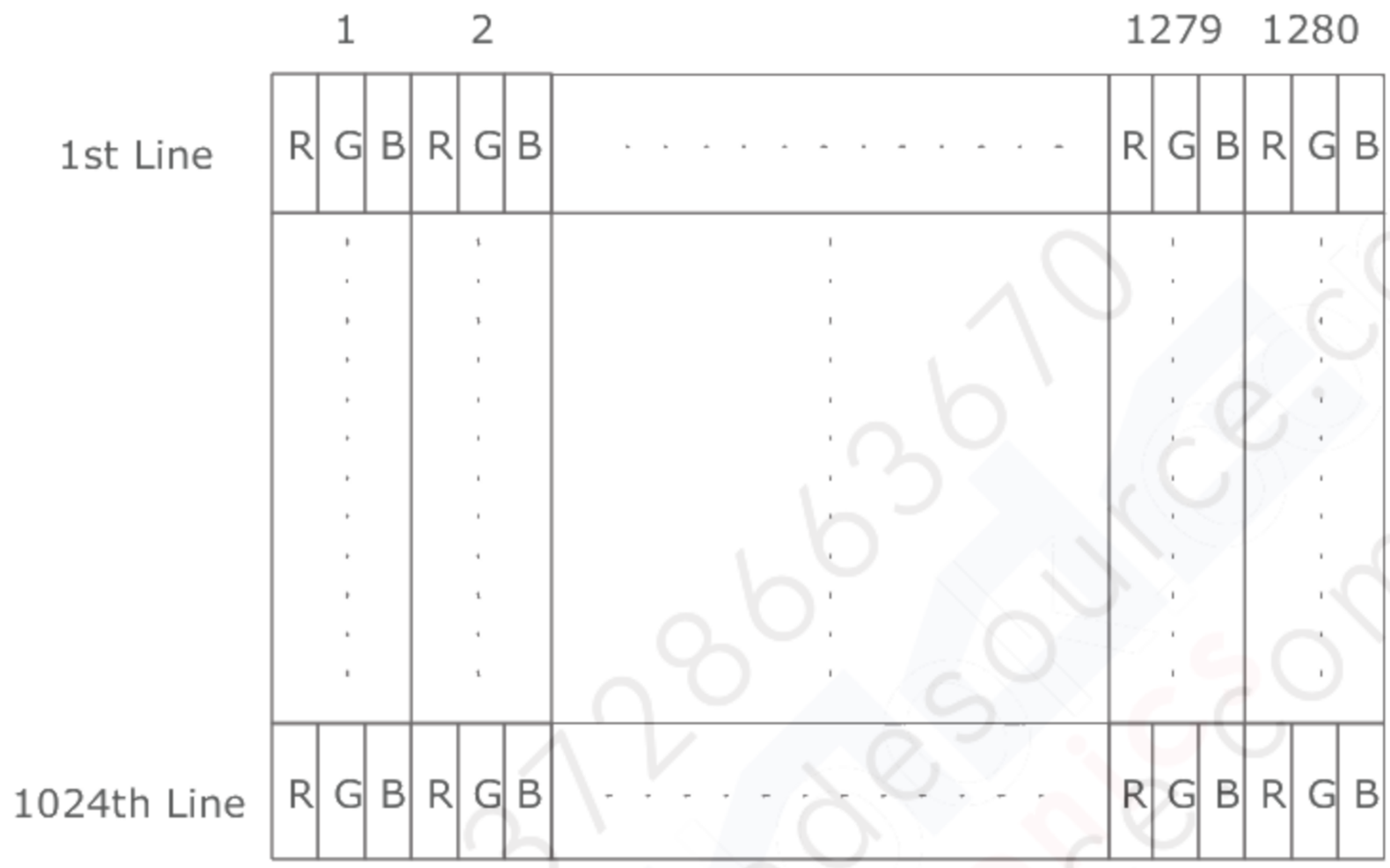

6.2 The Input Data Format

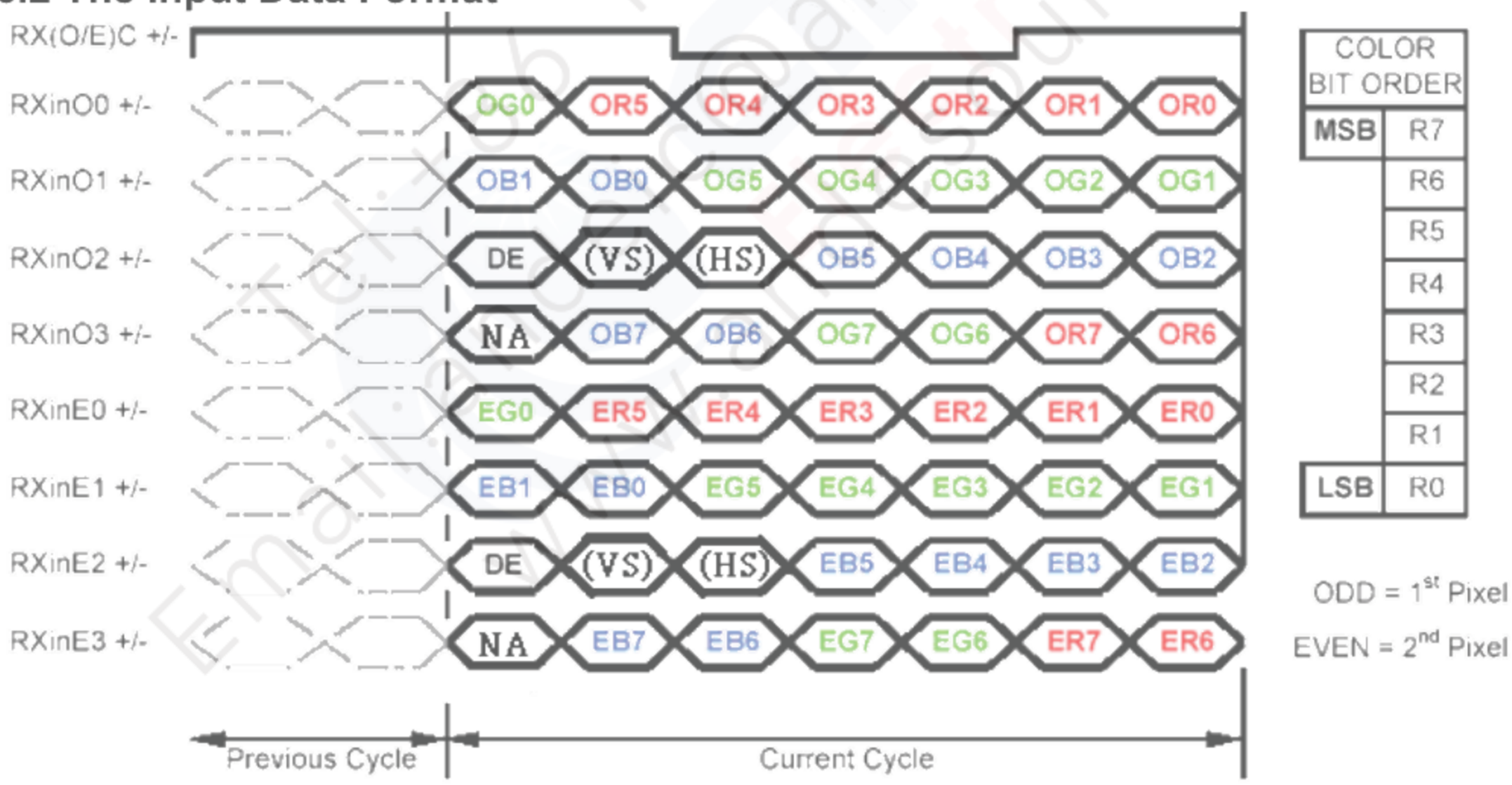

Note1: Please follow PSWG.
Note2: 8-bit in
Note3: DE: Data Enable, VS: Vsync, HS: Hsync, NA: No use

6.3 Signal Description

The module using one LVDS receiver SN75LVDS82(Texas Instruments). LVDS is a differential signal technology for LCD interface and high speed data transfer device. LVDS transmitters shall be SN75LVDS83(negative edge sampling). The first LVDS port(RxOxxx) transmits odd pixels while the second LVDS port(RxExxx) transmits even pixels.

PIN #	SIGNAL NAME	DESCRIPTION
1	RxOIN0-	Negative LVDS differential data input (Odd data)
2	RxOIN0+	Positive LVDS differential data input (Odd data)
3	RxOIN1-	Negative LVDS differential data input (Odd data)
4	RxOIN1+	Positive LVDS differential data input (Odd data)
5	RxOIN2-	Negative LVDS differential data input (Odd data, DSPTMG)
6	RxOIN2+	Positive LVDS differential data input (Odd data, DSPTMG)
7	GND	Power Ground
8	RxOCLKIN-	Negative LVDS differential clock input (Odd clock)
9	RxOCLKIN+	Positive LVDS differential clock input (Odd clock)
10	RxOIN3-	Negative LVDS differential data input (Odd data)
11	RxOIN3+	Positive LVDS differential data input (Odd data)
12	RxEIN0-	Negative LVDS differential data input (Even data)
13	RxEIN0+	Positive LVDS differential data input (Even data)
14	GND	Power Ground
15	RxEIN1-	Positive LVDS differential data input (Even data)
16	RxEIN1+	Negative LVDS differential data input (Even data)
17	GND	Power Ground
18	RxEIN2-	Negative LVDS differential data input (Even data)
19	RxEIN2+	Positive LVDS differential data input (Even data)
20	RxECLKIN-	Negative LVDS differential clock input (Even clock)
21	RxECLKIN+	Positive LVDS differential clock input (Even clock)
22	RxEIN3-	Negative LVDS differential data input (Even data)
23	RxEIN3+	Positive LVDS differential data input (Even data)
24	GND	Power Ground
25	GND	Power Ground
26	GND	Power Ground
27	GND	Power Ground
28	POWER	Power +3.3V
29	POWER	Power +3.3V
30	POWER	Power +3.3V

Note: "Power Ground" stands for 0V.

Note1: Start from left side

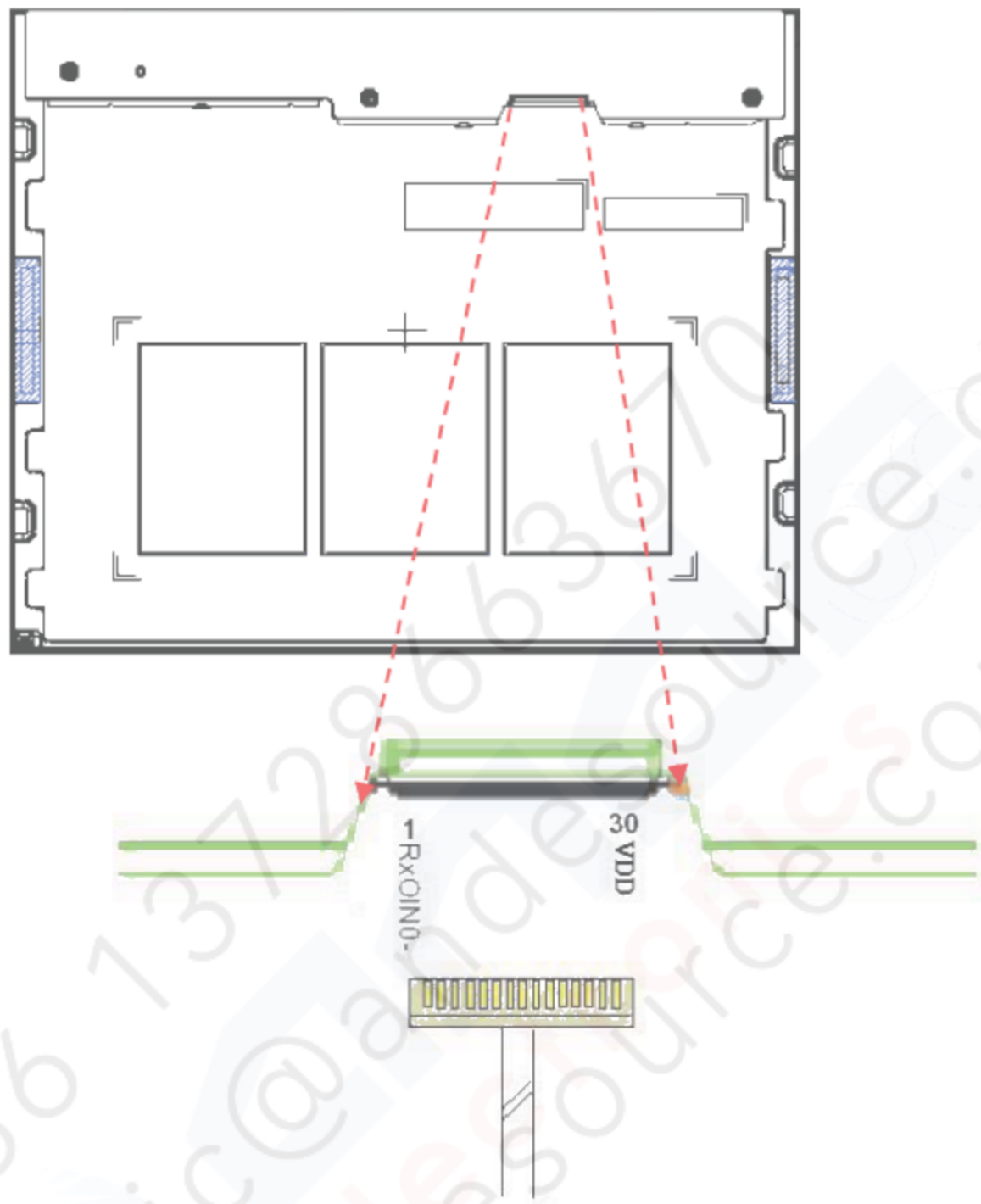

Note2: Input signals of odd and even clock shall be the same timing.

6.4 Interface Timing

6.4.1 Timing Characteristics

Signal	Item	Symbol	Min	Typ	Max	Unit
Vertical Section	Period	Tv	1032	1066	1150	Th
	Active	Tdisp(v)	1024	1024	1024	Th
	Blanking	Tbp(v)+Tfp(v)+PWvs	8	42	126	Th
Horizontal Section	Period	Th	780	844	2047	Tclk
	Active	Tdisp(h)	640	640	640	Tclk
	Blanking	Tbp(h)+Tfp(h)+PWhs	140	204	-	Tclk
Clock	Period	Tclk	22.2	18.52	14.81	ns
	Frequency	Freq.	44	54	67.5	MHz
Frame Rate	Frequency	1/Tv	49	60	75	Hz

Note: DE mode only

6.4.2 Timing Diagram

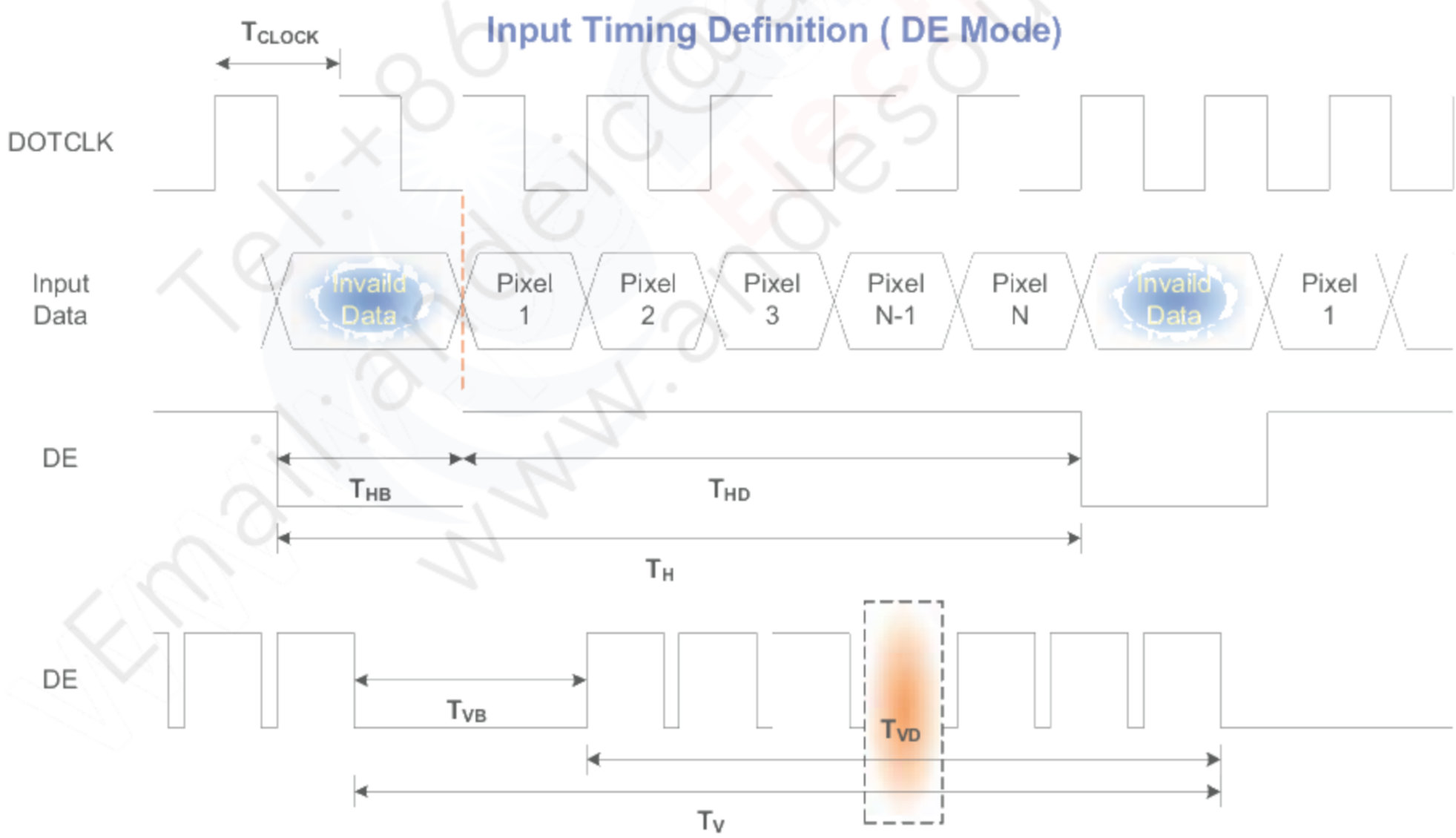

6.5 Power ON/OFF Sequence

VDD power and lamp on/off sequence are as follows. Interface signals are also shown in the chart. Signals from any system shall be Hi-Z state or low level when VDD is off.

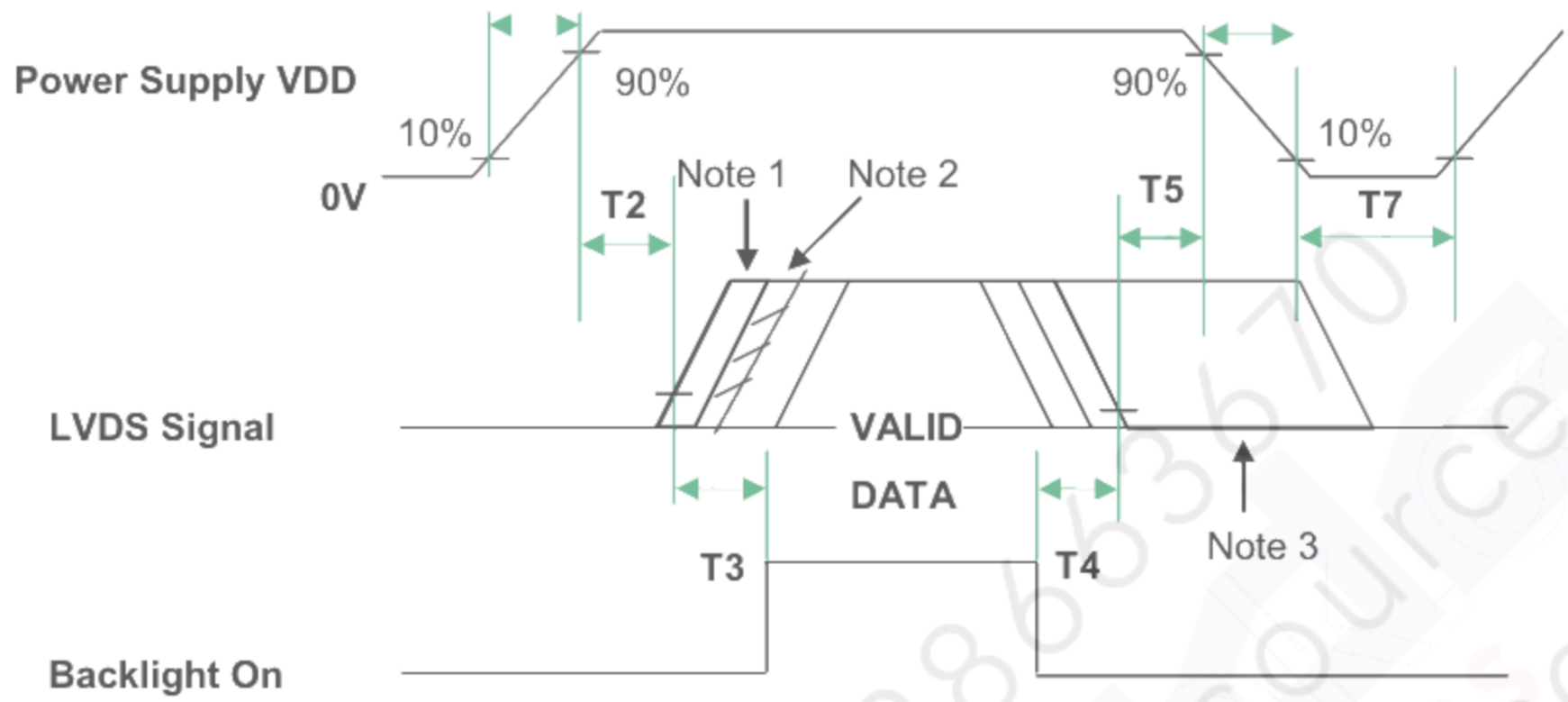

Note1: insert a white pattern 360ms

Note2: insert a black pattern

Note3: insert a white pattern after valid data and last until VDD falls to 10%.

Note4: when AC on/off, timing rule of logo power on/off is the same as above.

Power Sequence Timing				
Parameter	Value			Units
	Min.	Typ.	Max.	
T1	0.5	-	10	ms
T2	0	40	50	
T3	500	-	-	
T4	300	-	-	
T5	40	1500	-	
T6	-	-	-	
T7	1000	-	-	

7. Connector & Pin Assignment

Physical interface is described as for the connector on module.These connectors are capable of accommodating the following signals and will be following components.

7.1 TFT LCD Module

7.1.1 Connector

Connector Name / Designation	Interface Connector / Interface card
Manufacturer	JAE
Type Part Number	FI-XB30SSLA-HF15
Mating Housing Part Number	FI-X30HL

7.1.2 Pin Assignment

Pin#	Signal Name	Pin#	Signal Name
1	RxOIN0-	2	RxOIN0+
3	RxOIN1-	4	RxOIN1+
5	RxOIN2-	6	RxOIN2+
7	GND	8	RxOCLKIN-
9	RxOCLKIN+	10	RxOIN3-
11	RxOIN3+	12	RxEIN0-
13	RxEIN0+	14	GND
15	RxEIN1-	16	RxEIN1+
17	GND	18	RxEIN2-
19	RxEIN2+	20	RxECLKIN-
21	RxECLKIN+	22	RxEIN3-
23	RxEIN3+	24	GND
25	GND	26	GND
27	GND	28	POWER
29	POWER	30	POWER

7.2 Backlight Unit

Physical interface is described as for the connector on module. These connectors are capable of accommodating the following signals and will be following components.

7.2.1 Connector

Connector Name / Designation	Light Bar Connector
Manufacturer	Molex
Type Part Number	Molex 501568-06

7.2.2 Pin Assignment

Pin no.	Signal name
1	IRLED (current out)
2	IRLED (current out)
3	VLED (voltage in)
4	VLED (voltage in)
5	IRLED (current out)
6	IRLED (current out)

8. Reliability Test

Environment test conditions are listed as following table.

Items	Required Condition	Note
Temperature Humidity Bias (THB)	Ta= 50℃, 80%RH, 240hours	
High Temperature Operation (HTO)	Ta= 70℃, 240hours	
Low Temperature Operation (LTO)	Ta= -20℃, 240hours	
High Temperature Storage (HTS)	Ta= 70℃, 240hours	
Low Temperature Storage (LTS)	Ta= -20℃, 240hours	
Vibration Test (Non-operation)	Acceleration: 1.5 G Wave: Random Frequency: 10 - 200 - 10 Hz Sweep: 30 Minutes each Axis (X, Y, Z)	
Shock Test (Non-operation)	Acceleration: 50 G Wave: Half-sine Active Time: 20 ms Direction: ±X, ±Y, ±Z (one time for each Axis) Axis)	
Drop Test	Height: 60 cm, package test	
Thermal Shock Test (TST)	-20℃/30min, 60℃/30min, 50 cycles	
ESD (Electro-Static Discharge)	Contact Discharge: ± 8KV, 150pF(330Ω) 1sec, 9 points, 25 times/ point.	1
	Air Discharge: ± 15KV, 150pF(330Ω) 1sec, 9 points, 25 times/ point.	

Note1: According to EN61000-4-2, ESD class B: Some performance degradation allowed. No data lost Self-recoverable. No hardware failures.

Note2:

- Water condensation is not allowed for each test items.
- Each test is done by new TFT-LCD module. Don't use the same TFT-LCD module repeatedly for reliability test.
- The reliability test is performed only to examine the TFT-LCD module capability.
- To inspect TFT-LCD module after reliability test, please store it at room temperature and room humidity for 24 hours at least in advance.
- No function failure occurs.

9. Label Format

9.1. Shipping Label

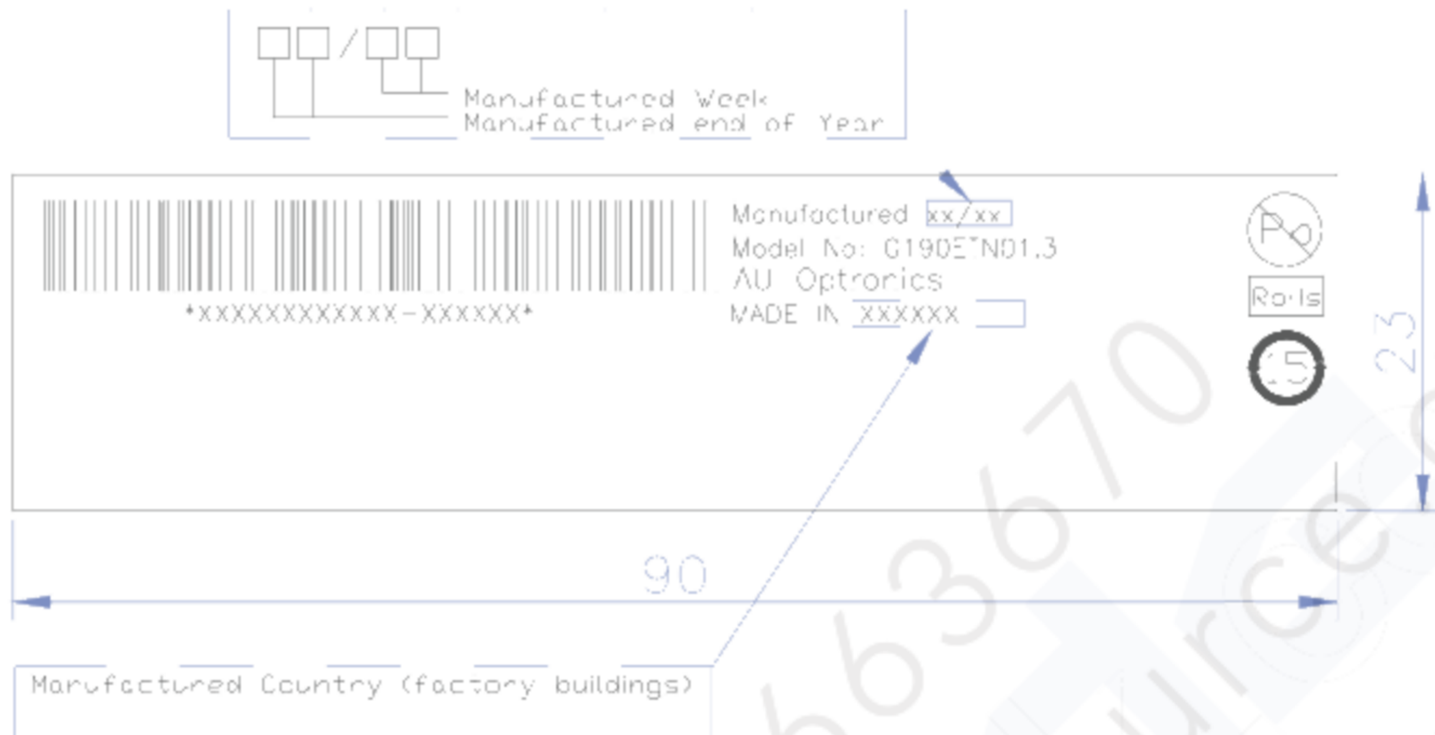

Unit: mm

9.2 Backlight Label

Unit: mm

10. Packing Form

10.1 Packaging Material

FILM PROTECT
BAG ANTI-STATIC
TAPE
TAPE CREPED PAPER
PACKING CARTON
LABEL SPEC
LABEL CARTON.
CUSHION PACKING

10.2 Packing Instruction

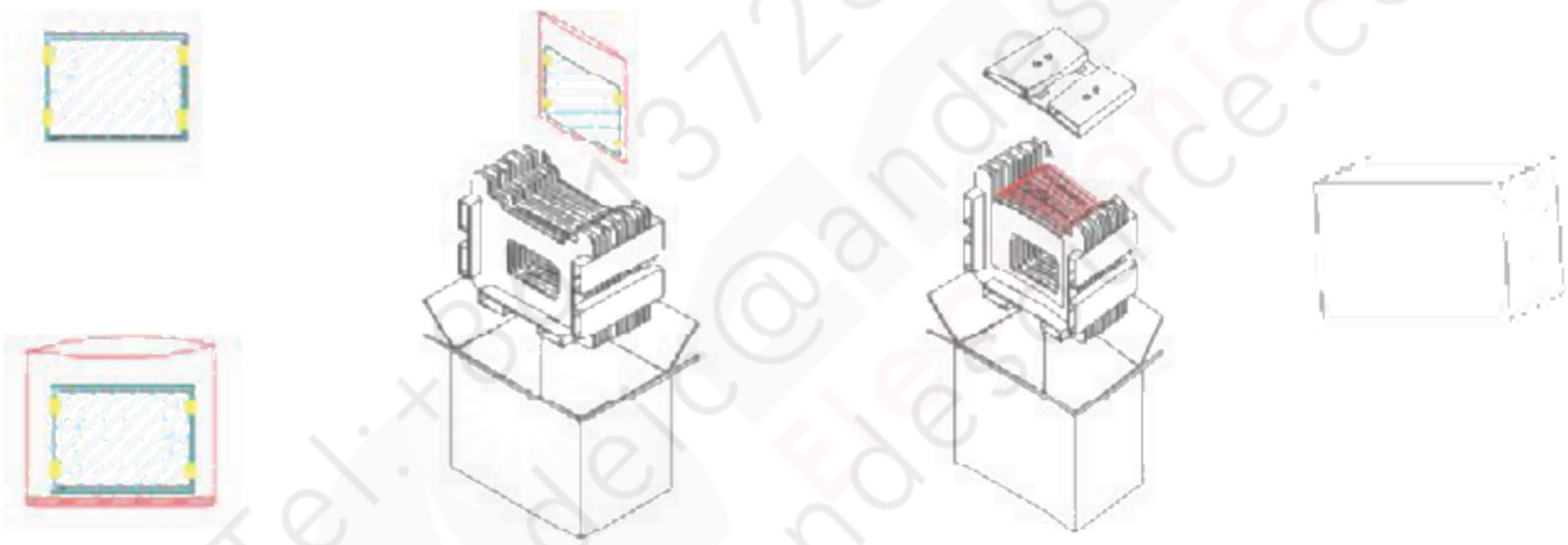

Max capacity：10 TFT-LCD module per carton

Max weight: 20.8 kg per carton

Outside dimension of carton: 489mm(L)*293mm(W)*420mm (H)

Pallet size： 1180 mm * 980 mm * 138mm

Box stacked

10.3 Palletizing

	SHIPPING BY AIR	SHIPPING BY SEA	SHIPPING BY SEA HQ
MODULE/CARTON	10	10	10
CARTON/LAYER	8	8	8
LAYER/PALLET	3	3+1	3+2
MODULE/PALLET	240	320	400
CARTON SIZE(MM)	448(L)*293(W)*420(H)	448(L)*293(W)*420(H)	448(L)*293(W)*420(H)
PALLET SIZE(MM)	1180(L)*980(W)*138(H)	1180(L)*980(W)*138(H)	1180(L)*980(W)*138(H)
TOTAL PALLET HEIGHT(MM)	1398	1956	2376
TOTAL PALLET WEIGHT(KG)	505	682	864

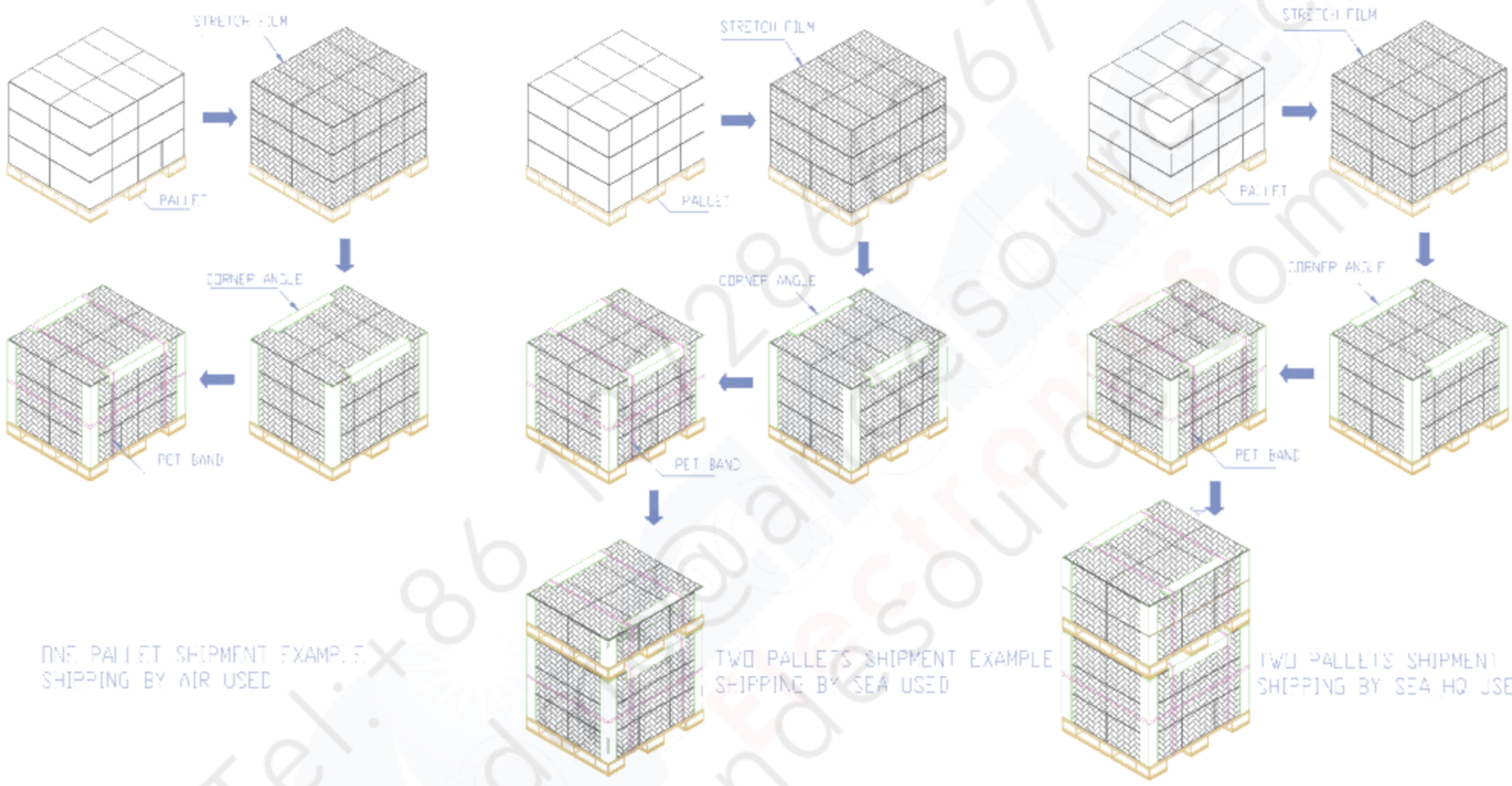

11. Outline Drawing