() Preliminary Specification
(V) Final Specification

Module	21.5” Color TFT-LCD
Model Name	G215HAN01.3

Customer	Date	Approved by	Date
		Crystal Hsieh	2018/8/22
Approved by		**Prepared by**	
		Wennie Lee	2018/8/22
Note: This Specification is subject to change without notice.		General Display Business Group / AU Optronics corporation	

Tel:+86 13728663670 Email:andelc@andesourcetronics.com www.andesourcetronics.com

Contents

1.0 Handling Precautions 4
2.0 General Description 5
2.1 Display Characteristics 5
2.2 Optical Characteristics 6
3.0 Functional Block Diagram 9
4.0 Absolute Maximum Ratings 10
4.1 TFT LCD Module 10
4.2 Absolute Ratings of Environment 10
5.0 Electrical characteristics 11
5.1 TFT LCD Module 11
5.2 Backlight Unit 13
6.0 Signal Characteristic 14
6.1 Pixel Format Image 14
6.2 The input data format 15
6.3 Signal Description 16
6.4 Timing Characteristics 18
6.5 Timing diagram 19
6.6 Power ON/OFF Sequence 20
7.0 Connector & Pin Assignment 21
7.1 TFT LCD Module 21
7.2 LED Backlight Unit: LED Connector 22
7.3 LED Connector Pin Assignment 22
8.0 Reliability Test 23
9.0 Shipping Label & Packaging 24
9.1 Shipping Label 24
9.2 Packaging 25
9.3 Palletizing and shipment information 25
10.0 Mechanical Characteristics 26
11 Safety 28
11.1 Sharp Edge Requirements 28
11.2 Materials 28
11.3 Capacitors 28
11.4 National Test Lab Requirement 28

Record of Revision

Version	Date	Page	Old description	New Description
0.1	2018/5/18	All	First draft specification	
1.0	2018.8.22	All	Final Specification	

Tel:+86 13728663670
Email:andeic@andesource.com
www.andesource.com

1.0 Handling Precautions

1) Since front polarizer is easily damaged, pay attention not to scratch it.
2) Be sure to turn off power supply when inserting or disconnecting from input connector.
3) Wipe off water drop immediately. Long contact with water may cause discoloration or spots.
4) When the panel surface is soiled, wipe it with absorbent cotton or other soft cloth.
5) Since the panel is made of glass, it may break or crack if dropped or bumped on hard surface.
6) Since CMOS LSI is used in this module, take care of static electricity and insure human earth when handling.
7) Do not open or modify the Module Assembly.
8) Do not press the reflector sheet at the back of the module to any directions.
9) In case if a Module has to be put back into the packing container slot after it was taken out from the container, do not press the center of LED lightbar edge. Instead, press at the far ends of the LED light bar edge softly. Otherwise the TFT Module may be damaged.
10) At the insertion or removal of the Signal Interface Connector, be sure not to rotate nor tilt the Interface Connector of the TFT Module.
11) After installation of the TFT Module into an enclosure, do not twist nor bend the TFT Module even momentarily. While designing the enclosure, it should be taken into consideration that no bending/twisting forces are applied to the TFT Module from outside. Otherwise the TFT Module may be damaged.
12) Small amount of materials having no flammability grade is used in the LCD module. The LCD module should be supplied by power complied with requirements of Limited Power Source (IEC60950-1 or UL60950-1), or be applied exemption.

Tel:+86-13728663670
Email:andeic@andesourcecom
www.andesourcecom

2.0 General Description

This specification applies to the 21.5 inch-wide Color AHVA (IPS-like) TFT-LCD Module G215HAN01.3 The display supports the FHD [1920(H) x 1080(V)] screen format and 16.7M colors . All input signals are LVDS interface comaptible.

2.1 Display Characteristics

The following items are characteristics summary on the table under 25°C condition:

ITEMS	Unit	SPECIFICATIONS
Screen Diagonal	[mm]	21.5"
Active Area	[mm]	476.064 (H) x 267.786 (V)
Pixels H x V		1920(x3) x 1080
Pixel Pitch	[um]	247.95 (per one triad) ×247.95
Pixel Arrangement		R.G.B. Vertical Stripe
Display Mode		AHVA Mode, Normally Black
White Luminance (Center)	[cd/m^2]	250 cd/m2 (Typ.)
Contrast Ratio		1000 (Typ.)
Optical Response Time	[msec]	22
Nominal Input Voltage VDD	[Volt]	5 V (Typ)
Power Consumption (VDD line + LED line)	[Watt]	11.1W (Typ.) LCD module : PDD (Typ.)= 2.3 @ White pattern,Fv=60Hz Backlight unit : P_{BLU} (Typ.) =8.8W
Weight	[Grams]	1740 (Typ)
Physical Size	[mm]	497.6(H) x 292.2(V) x 10.5 (D)Typ
Electrical Interface		Dual LVDS
Support Color		16.7M colors
Surface Treatment		Anti-Glare, 3H
RoHS Compliance		RoHS Compliance
Temperature Range Operating Storage (Shipping)	 [°C] [°C]	 0~ 60 -20~ 60

Tel:+86-137-7270-6670 Email:ahdelic@gmail.com www.ampesource.com

2.2 Optical Characteristics

The optical characteristics are measured under stable conditions at 25 °C:

Item	Unit	Conditions	Min.	Typ.	Max.	Note
Central Luminance	cd/m²	ILED=60mA(center point)	200	250		*1*
Luminance Uniformity	%	9 points	75	80		*2,3*
Contrast ratio		Normal Direction	600	1000	-	*4*
Response Time	msec	Raising Time (T_{rR})		12	22	*5*
		Falling Time (T_{rF})		10	20	
		Raising + Falling		22	42	
Viewing Angle	degree	Horizontal (Right) CR >10 (Left)		89 89		*6*
		Vertical (Up) CR > 10 (Down)		89 89		
Color / Chromaticity Coordinates (CIE 1931)		Red x	0.613	0.643	0.673	
		Red y	0.304	0.334	0.364	
		Green x	0.286	0.316	0.346	
		Green y	0.599	0.629	0.659	
		Blue x	0.127	0.157	0.187	
		Blue y	0.022	0.052	0.082	
		White x	0.283	0.313	0.343	
		White y	0.299	0.329	0.359	
Color Gamut	%			72		

Note 1: Measurement method

Equipment Pattern Generator, Power Supply, Digital Voltmeter, Luminance meter (SR_3 or equivalent)

Aperture 1◦ with 50cm viewing distance

Test Point Center

Environment *< 1 lux*

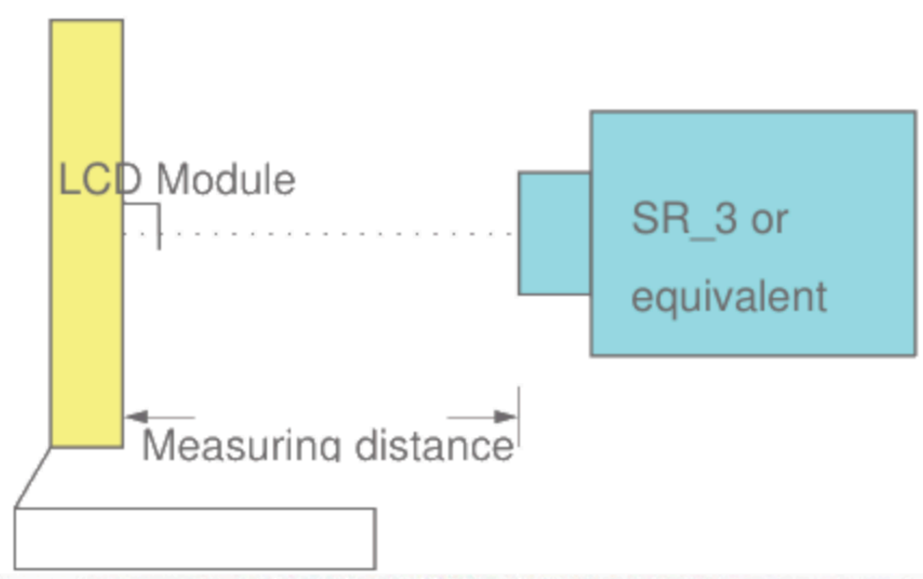

Note 2: Definition of 9 points position

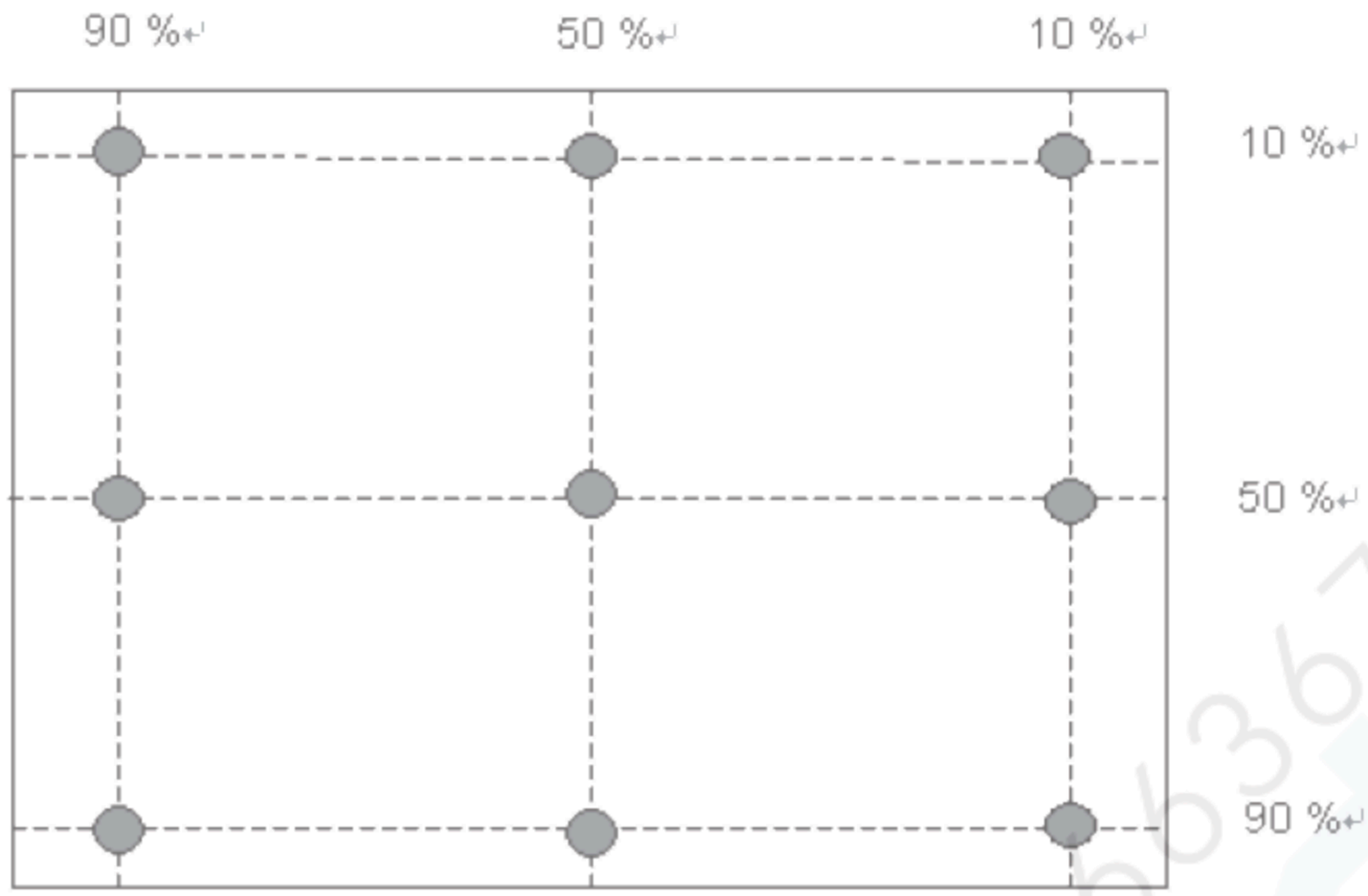

Note 3: The luminance uniformity of 9 points is defined by dividing the minimum luminance values by the maximum test point luminance

$$\delta_{W9} = \frac{\text{Minimum Brightness of 9 points}}{\text{Maximum Brightness of 9 points}}$$

Note 4: Definition of contrast ratio (CR):

$$\text{Contrast ratio (CR)} = \frac{\text{Brightness on the “White” state}}{\text{Brightness on the “Black” state}}$$

Note 5: Definition of response time:

The output signals of photo detector are measured when the input signals are changed from “White” to “Black” (falling time) and from “Black” to “White” (rising time), respectively. The response time interval is between 10% and 90% of amplitudes. Please refer to the figure as below.

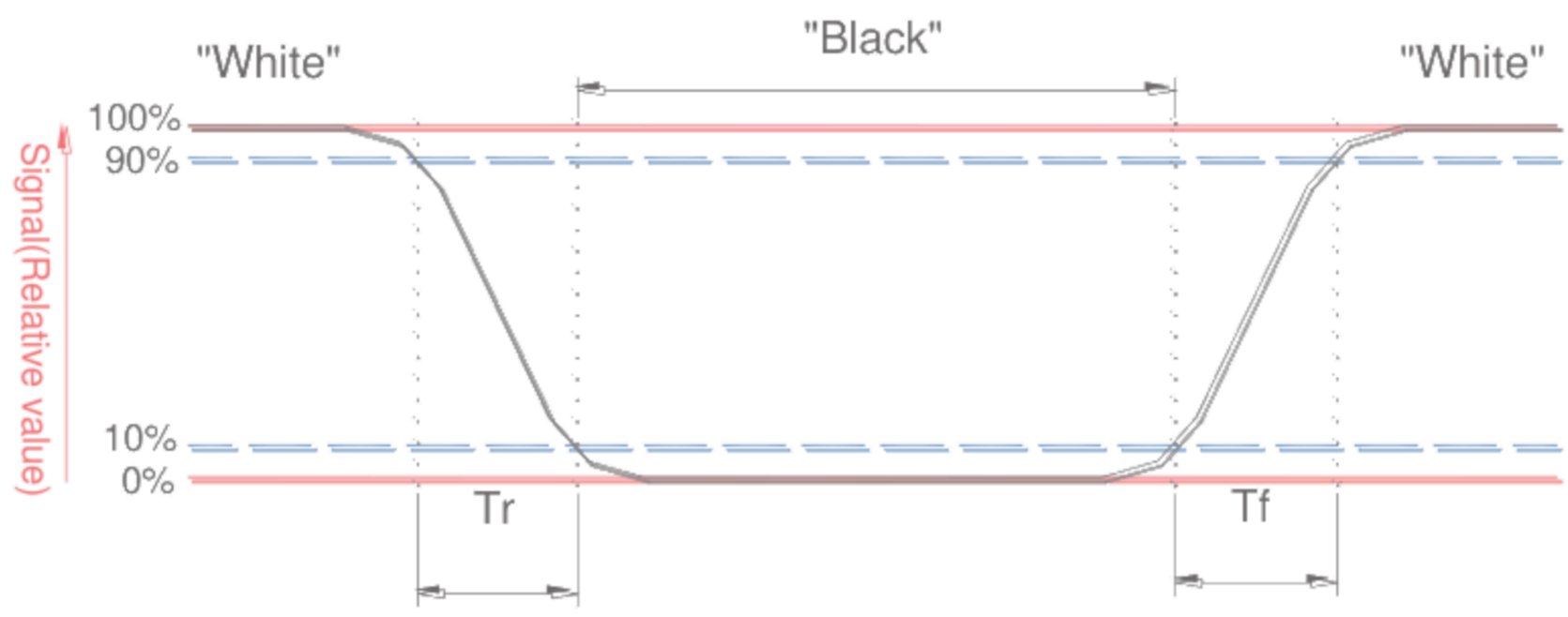

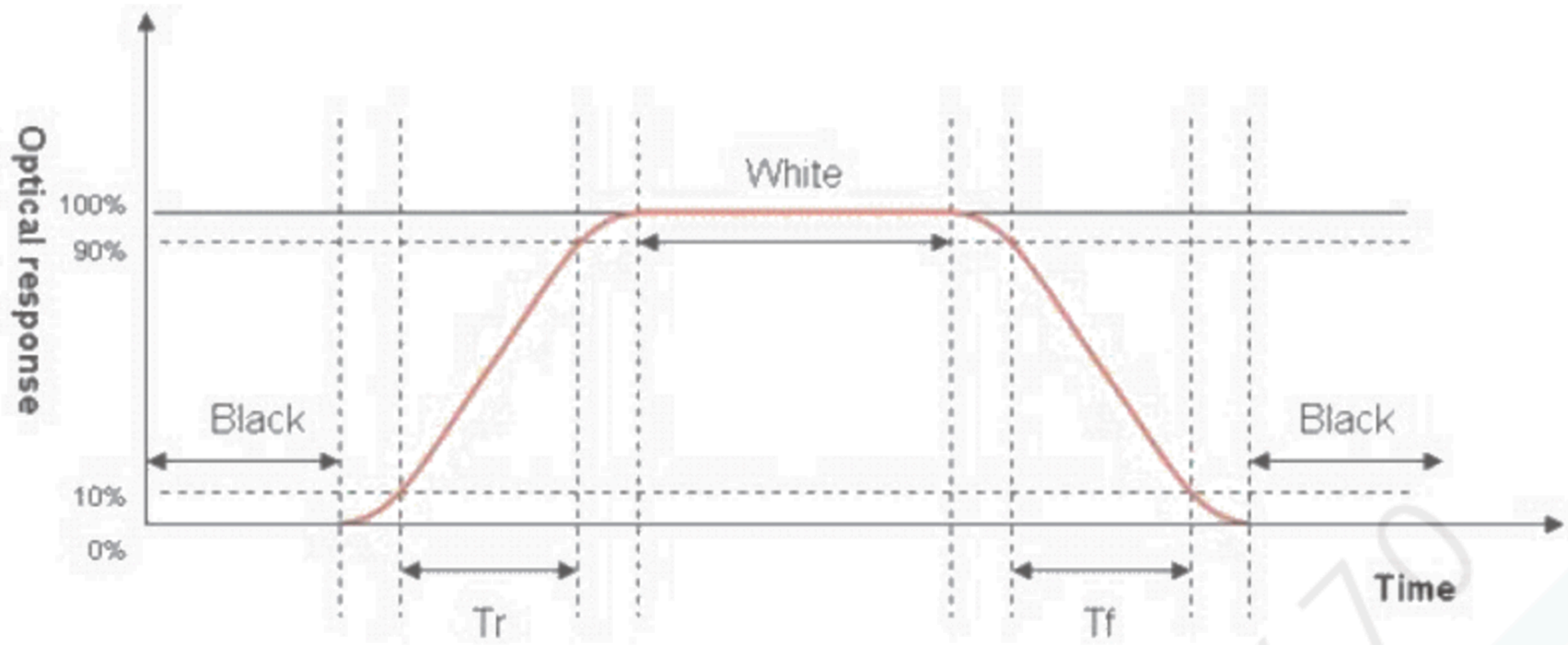

Note 6: Definition of viewing angle

Viewing angle is the measurement of contrast ratio ≧10, at the screen center, over a 180° horizontal and 180° vertical range (off-normal viewing angles). The 180° viewing angle range is broken down as below: 90° (θ) horizontal left and right, and 90° (Φ) vertical high (up) and low (down). The measurement direction is typically perpendicular to the display surface with the screen rotated to its center to develop the desired measurement viewing angle.

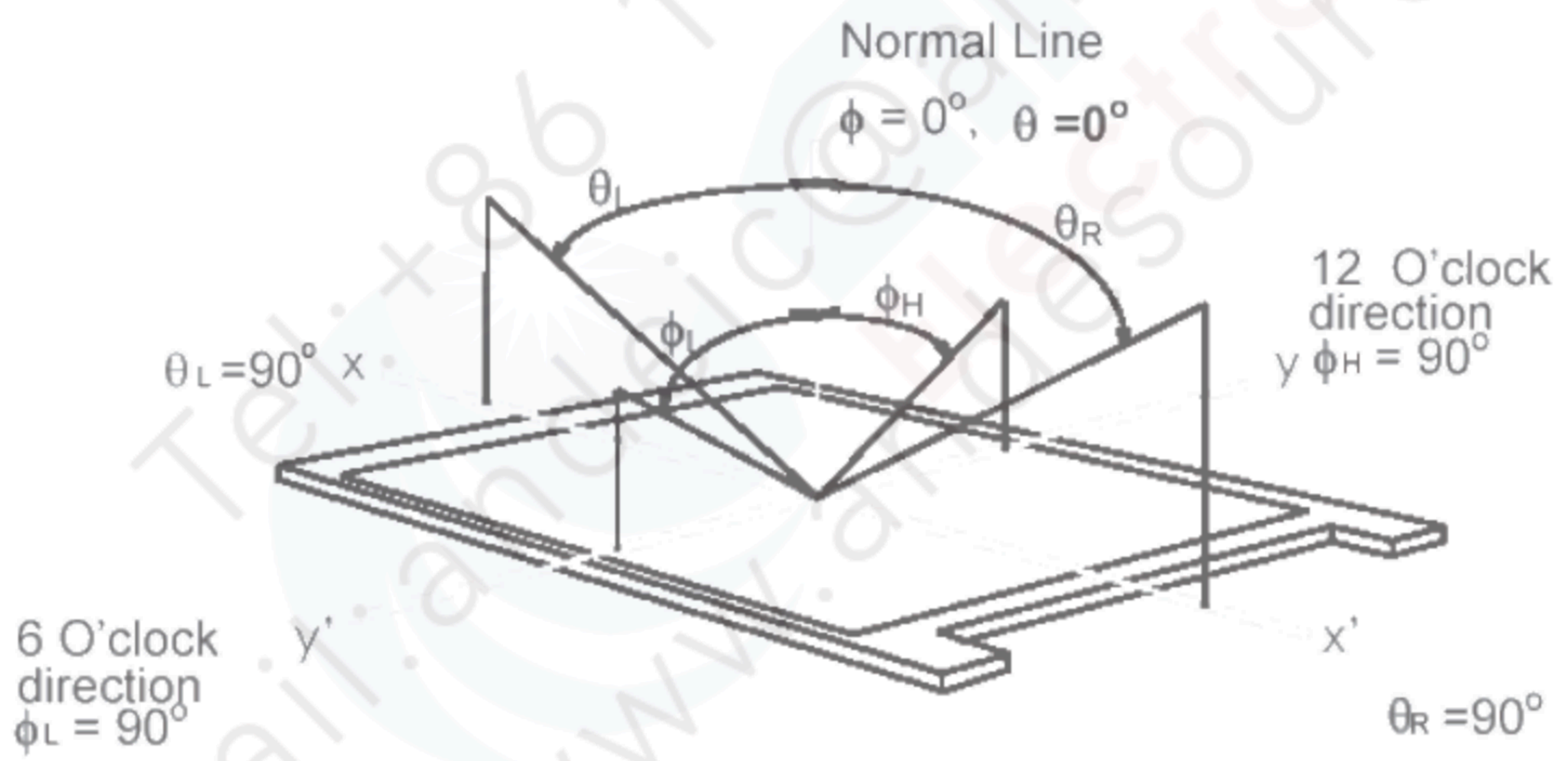

3.0 Functional Block Diagram

The following diagram shows the functional block of the 21.5 inch Color TFT-LCD Module:

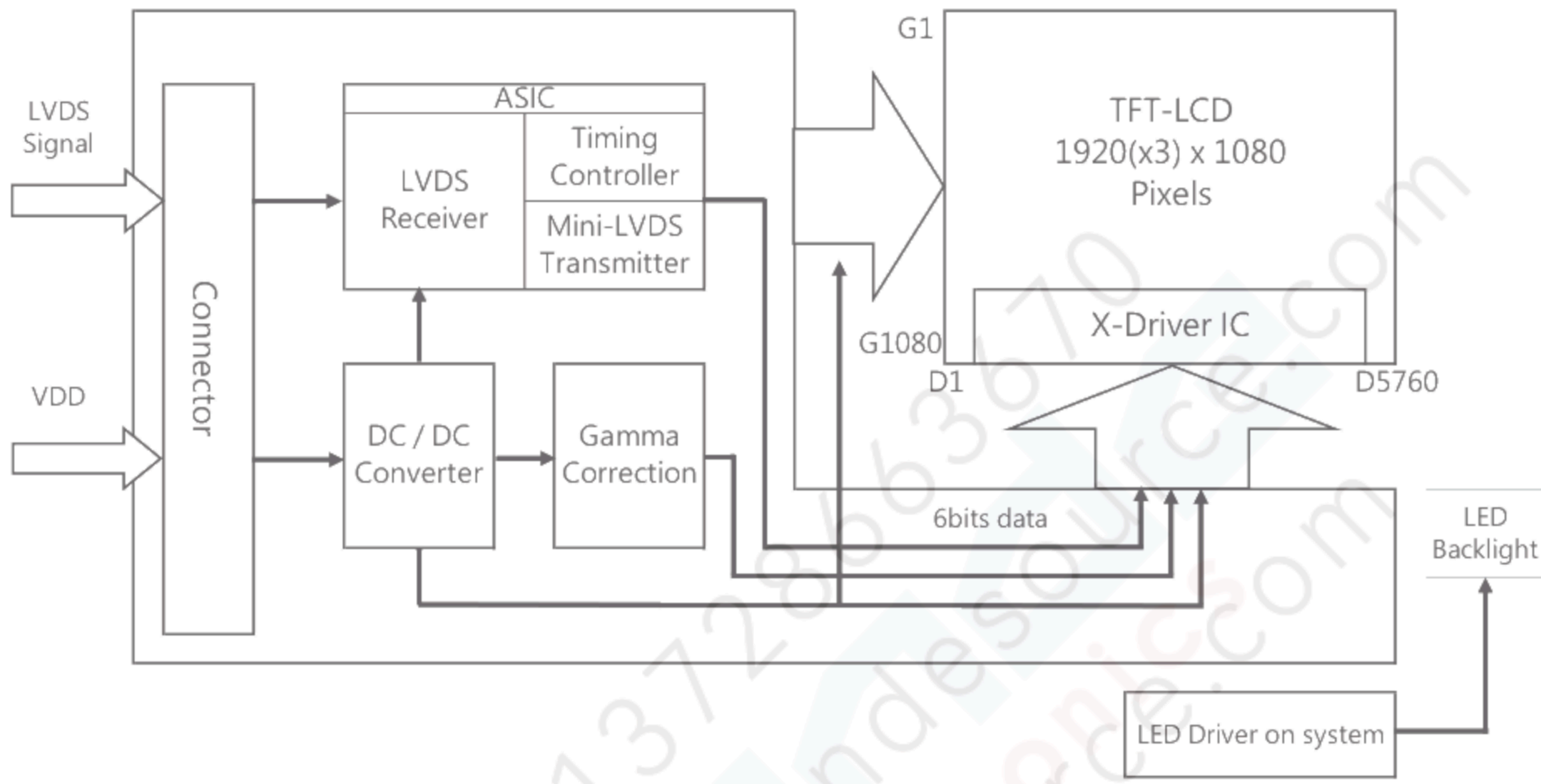

Tel:+86 13728663670
Email:andeic@andesourcetech.com
www.andesourcetech.com

4.0 Absolute Maximum Ratings

Absolute maximum ratings of the module are as following:

4.1 TFT LCD Module

Item	Symbol	Min	Max	Unit	Conditions
Logic/LCD Drive Voltage	VDD	-0.3	+5.5	[Volt]	***Note 1,2***

4.2 Absolute Ratings of Environment

Item	Symbol	Min.	Max.	Unit	Conditions
Operating Temperature	TOP	0	60	[°C]	***Note 3 & 4***
Operation Humidity	HOP	5	90	[%RH]	
Storage Temperature	TST	-20	60	[°C]	
Storage Humidity	HST	5	90	[%RH]	

Note 1: With in Ta (25 °C)
Note 2: Permanent damage to the device may occur if exceeding maximum values
Note 3: For quality perfermance, please refer to AUO IIS(Incoming Inspection Standard).
Note 4: Operation Temperature +60°C is defined as panel surface termperature.

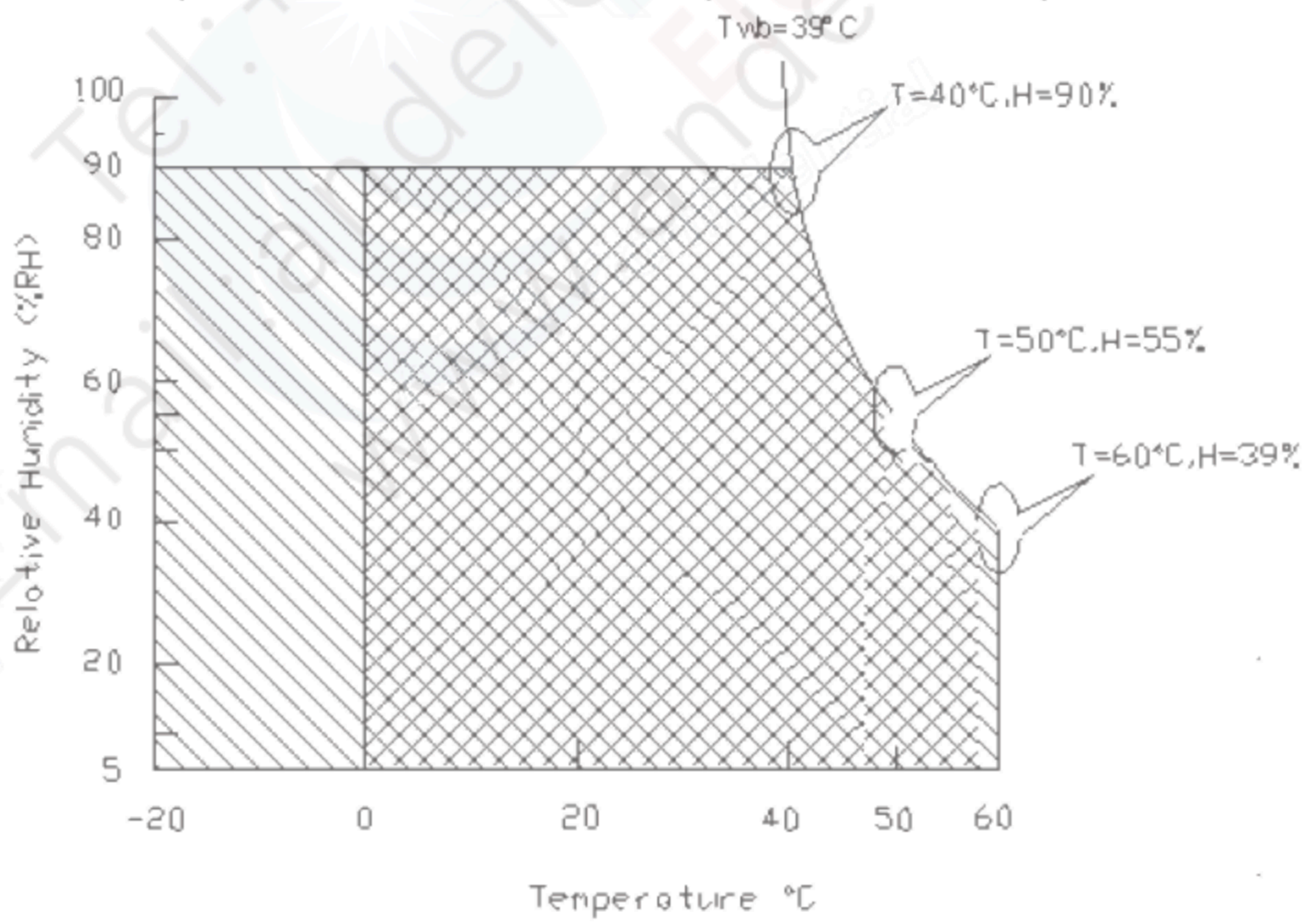

Operating Range Storage Range

5.0 Electrical characteristics

5.1 TFT LCD Module

5.1.1 Power Specification

Input power specifications are as follows:

Symbol	Parameter	Min	Typ	Max	Unit	Conditions
VDD	Logic/LCD Drive Voltage	4.5	5.0	5.5	[Volt]	+/-10%
IDD	Input Current	-	0.46	0.55	[A]	VDD= 5.0V, All White Pattern At 60Hz,
PDD	VDD Power	-	2.3	2.75	[Watt]	VDD= 5.0V, All White Pattern At 60Hz
IRush	Inrush Current	-		3.0	[A]	Note 1
VDDrp	Allowable Logic/LCD Drive Ripple Voltage	-	-	500	[mV] p-p	VDD= 5.0V, All White Pattern At 60Hz

Note 1: Measurement conditions:

The duration of rising time of power input is 470us.

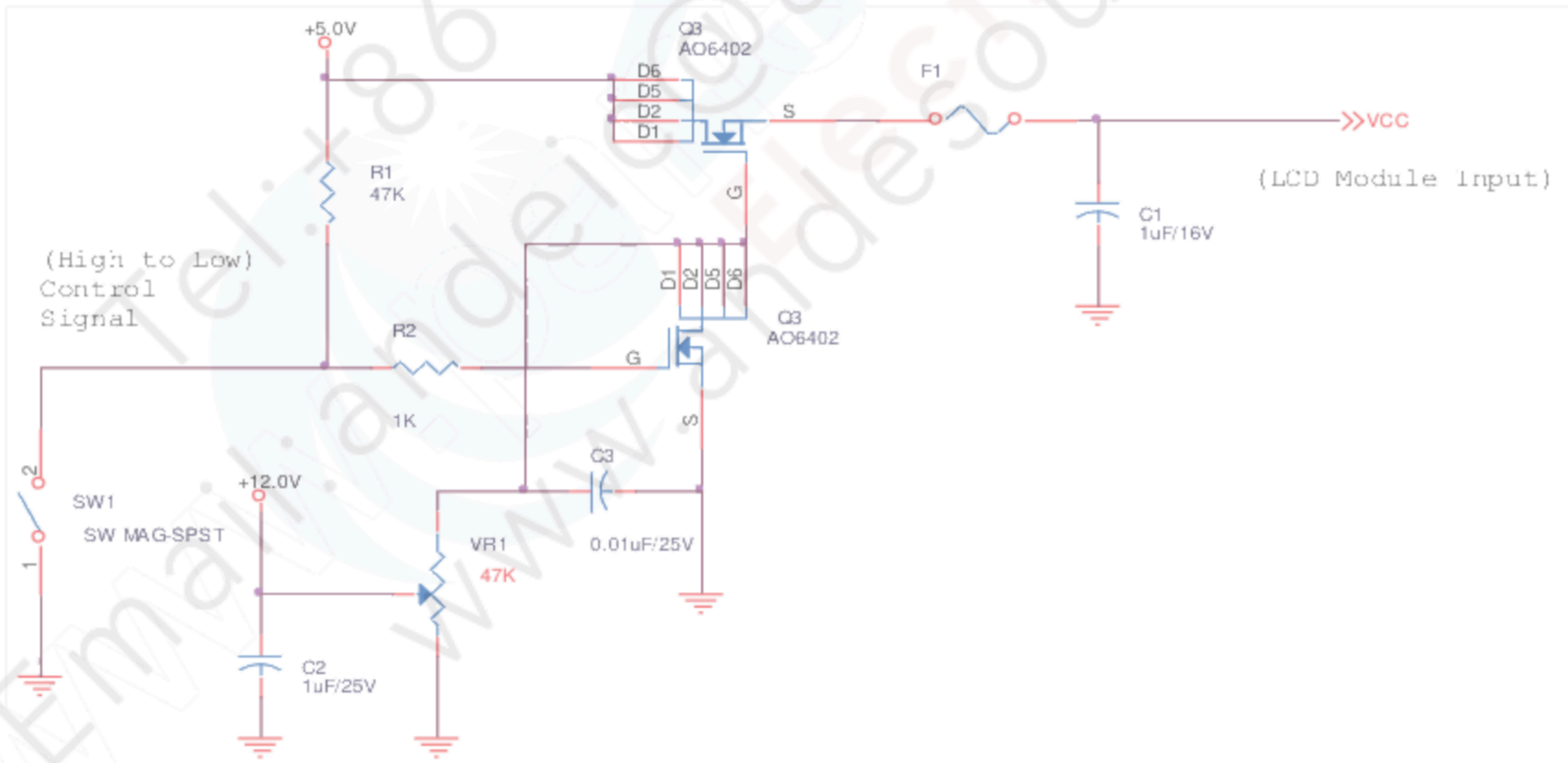

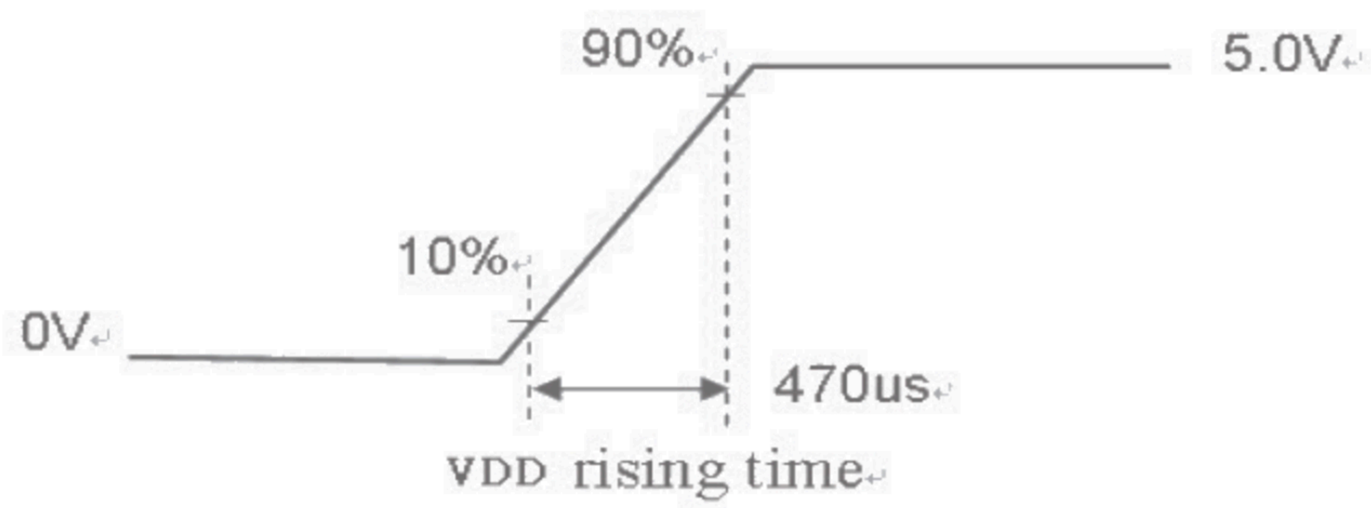

5.1.2 Signal Electrical Characteristics

Input signals shall be low or Hi-Z state when VDD is off. Please refer to specifications of SN75LVDS82DGG (Texas Instruments) in detail.

Characteristics of each signal are as follows:

Symbol	Parameter	Min	Typ	Max	Units	Condition
VTH	Differential Input High Threshold			100	[mV]	VICM = 1.2V ***Note 1***
VTL	Differential Input Low Threshold	-100			[mV]	VICM = 1.2V ***Note 1***
|VID|	Input Differential Voltage	100	400	600	[mV]	***Note 1***
VICM	Differential Input Common Mode Voltage	1.0	1.2	1.5	[V]	VTH-VTL = 200MV (max) ***Note 1***

Note 1: LVDS Signal Waveform

Use RxOCLK- & RxOCLK+ as example.

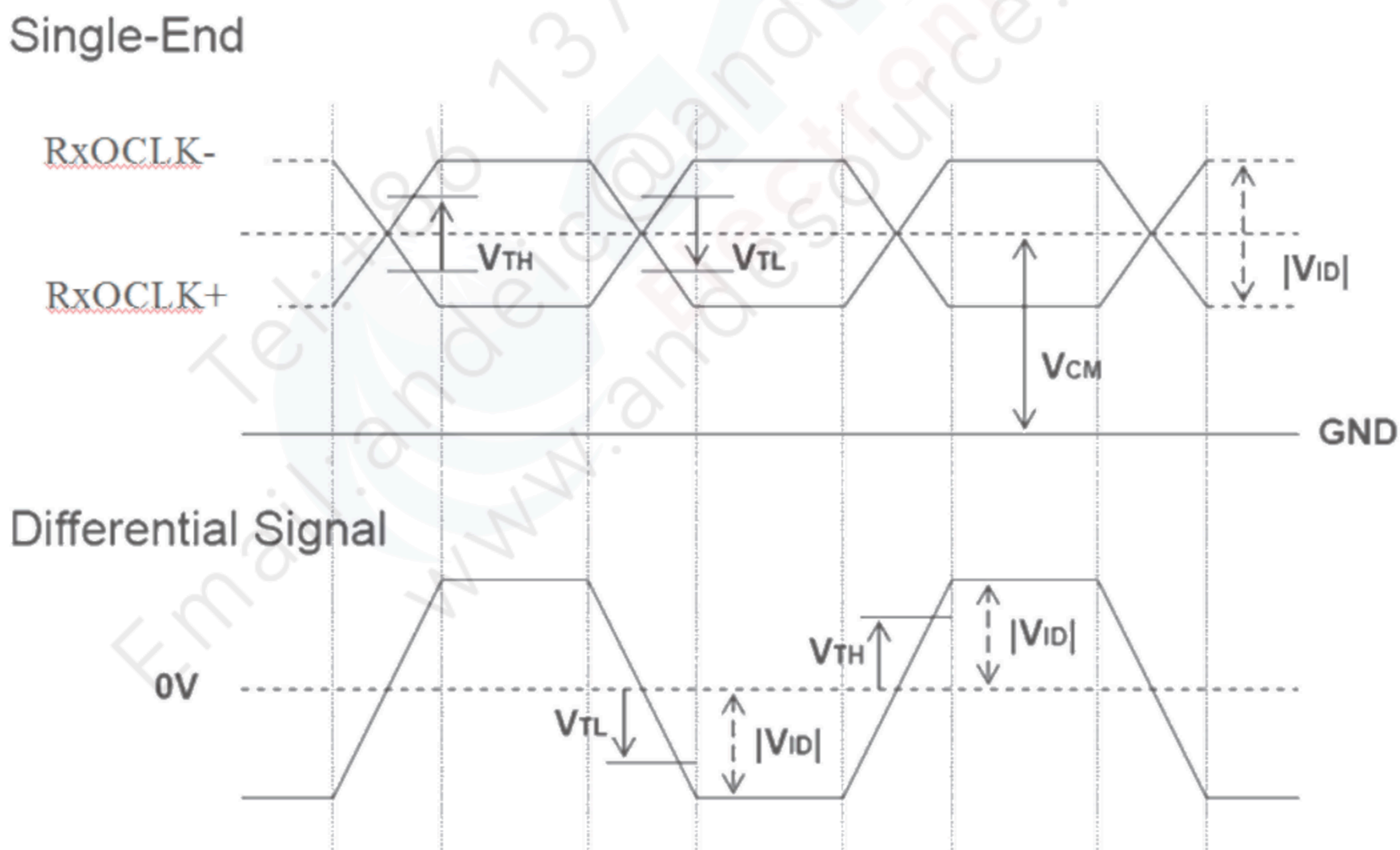

5.2 Backlight Unit

Following characteristics are measured under a stable condition at 25 °C (Room Temperature):

Symbol	Parameter	Min.	Typ.	Max.	Unit	Remark
I_F	LED Supply Current		60		mA	Ta = 25 °C
V_F	LED Supply Voltage	-	3.05	3.4	Volt	I_F =60 mA, Ta = 25°C
P_{LED}	LED Power Consumption	-	0.183		Watt	I_F =60 mA, Ta = 25°C
LL	LED Life Time	50,000			Hrs	I_F=60 mA, Ta= 25°C

Note 1: Ta means ambient temperature of TFT-LCD module.

Note 2: I_F, V_F , P_{LED} are defined for single LED.

Note 3: If G215HAN01.3 module is driven by high current or at high ambient temperature & humidity condition. The operating life will be reduced.

Note 4: Operation life means brightness goes down to 50% initial brightness. Minimum operating life time is estimated data.

Note 5: Each LED light bar consists of 48 pcs LED package (4 strings x 12 pcs / string)

Tel:+86 13728663670
Email:andeic@andesourcelcd.com
www.andesourcelcd.com

6.0 Signal Characteristic

6.1 Pixel Format Image

Following figure shows the relationship of the input signals and LCD pixel format.

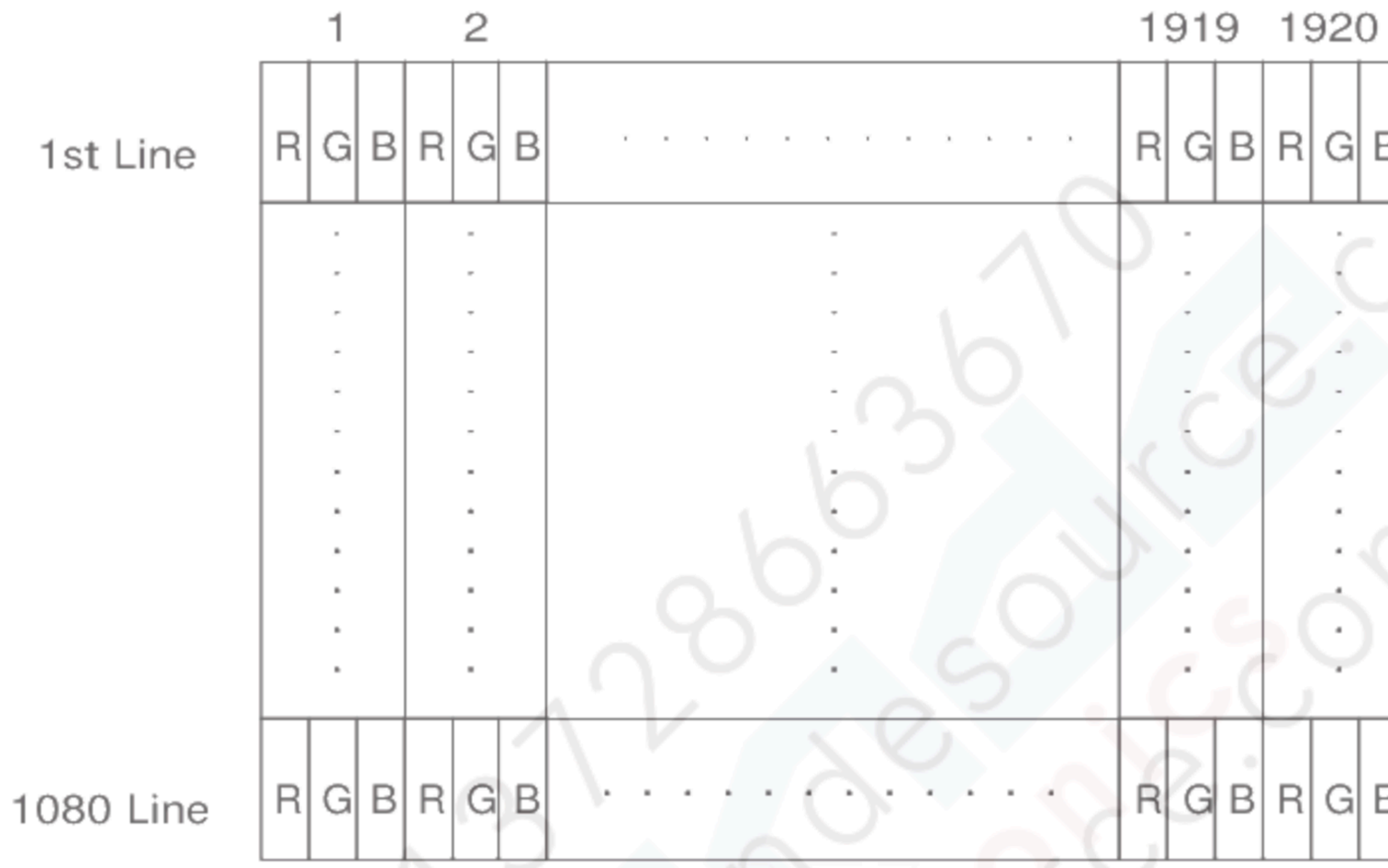

Tel:+86 13728663670
Email:andeic@andesource.com
www.andesource.com

6.2 The input data format

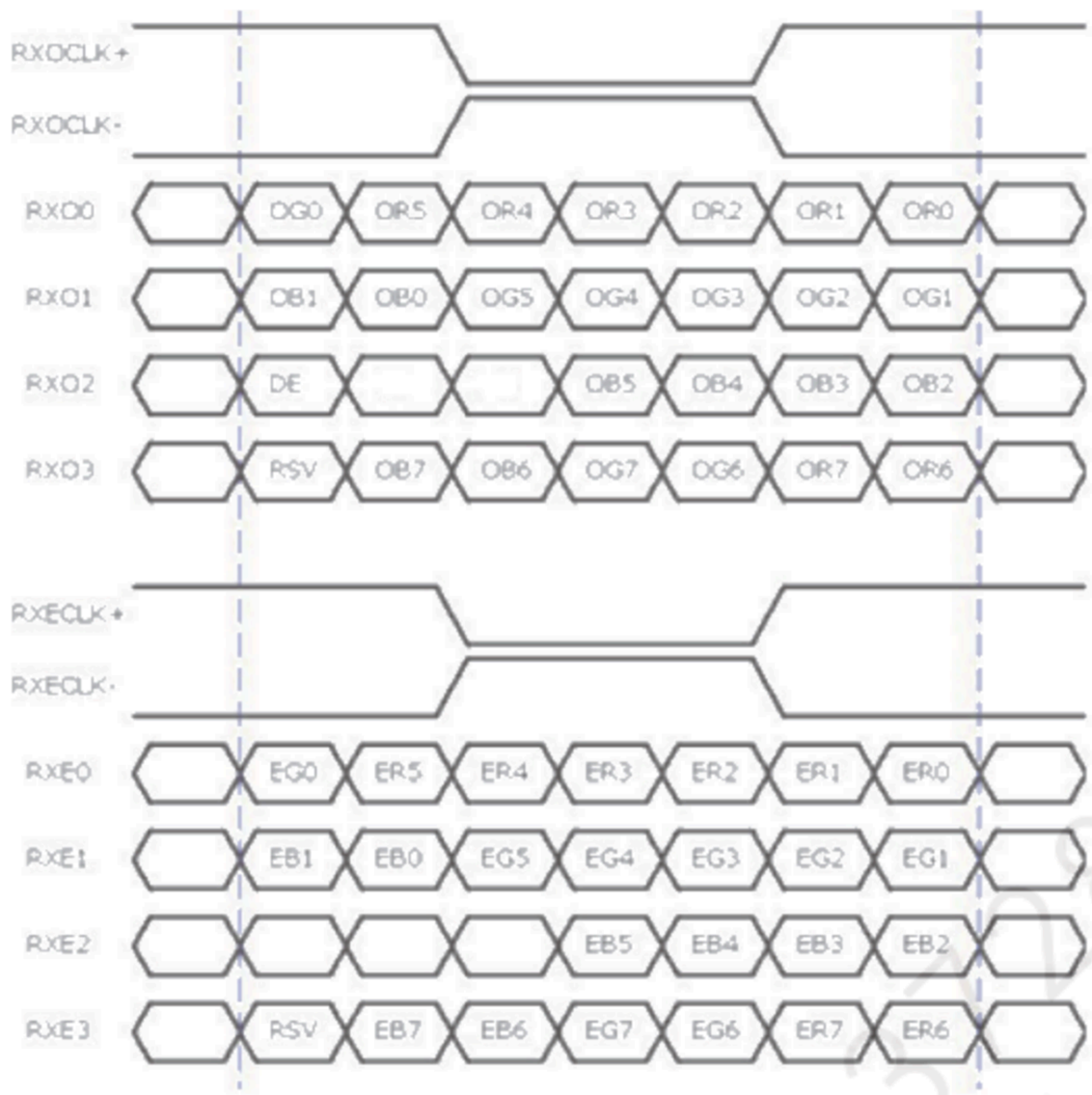

8 Bit Color Bit Order			
MSB	R7	G7	B7
	R6	G6	B6
	R5	G5	B5
	R4	G4	B4
	R3	G3	B3
	R2	G2	B2
	R1	G1	B1
LSB	R0	G0	B0

Note1: Normally DE mode only. VS and HS on EVEN channel are not used.

Note2: Please follow VESA.

Note3: 8-bits signal input.

Tel:+86 13928663670
Email:andeic@andesource.com
www.andesource.com

6.3 Signal Description

The module using a pair of LVDS receiver **SN75LVDS82** / **SN75LVDS83** (Texas Instruments) or compatible. LVDS is a differential signal technology for LCD interface and high speed data transfer device. Transmitter shall be SN75LVDS83(negative edge sampling) or compatible. The first LVDS port(RxOxxx) transmits odd pixels while the second LVDS port(RxExxx) transmits even pixels.

PIN #	SIGNAL NAME	DESCRIPTION
1	RxO0-	Negative LVDS differential data input (Odd data)
2	RxO0+	Positive LVDS differential data input (Odd data)
3	RxO1-	Negative LVDS differential data input (Odd data)
4	RxO1+	Positive LVDS differential data input (Odd data)
5	RxO2-	Negative LVDS differential data input (Odd data)
6	RxO2+	Positive LVDS differential data input (Odd data)
7	GND	Ground
8	RxOCLK-	Negative LVDS differential clock input (Odd clock)
9	RxOCLK+	Positive LVDS differential clock input (Odd clock)
10	RxO3-	Negative LVDS differential data input (Odd data)
11	RxO3+	Positive LVDS differential data input (Odd data)
12	RxE0-	Negative LVDS differential data input (Even data)
13	RxE0+	Positive LVDS differential data input (Even data)
14	GND	Ground
15	RxE1-	Negative LVDS differential data input (Even data)
16	RxE1+	Positive LVDS differential data input (Even data)
17	GND	Ground
18	RxE2-	Negative LVDS differential data input (Even data)
19	RxE2+	Positive LVDS differential data input (Even data)
20	RxECLK-	Negative LVDS differential clock input (Even clock)
21	RxECLK+	Positive LVDS differential clock input (Even clock)
22	RxE3-	Negative LVDS differential data input (Even data)
23	RxE3+	Positive LVDS differential data input (Even data)
24	GND	Ground
25	NC	No connection (for AUO test only. Do not connect)
26	NC	No connection (for AUO test only. Do not connect)
27	NC	No connection (for AUO test only. Do not connect)
28	VDD	Power Supply Input Voltage
29	VDD	Power Supply Input Voltage
30	VDD	Power Supply Input Voltage

Note1: Start from right side

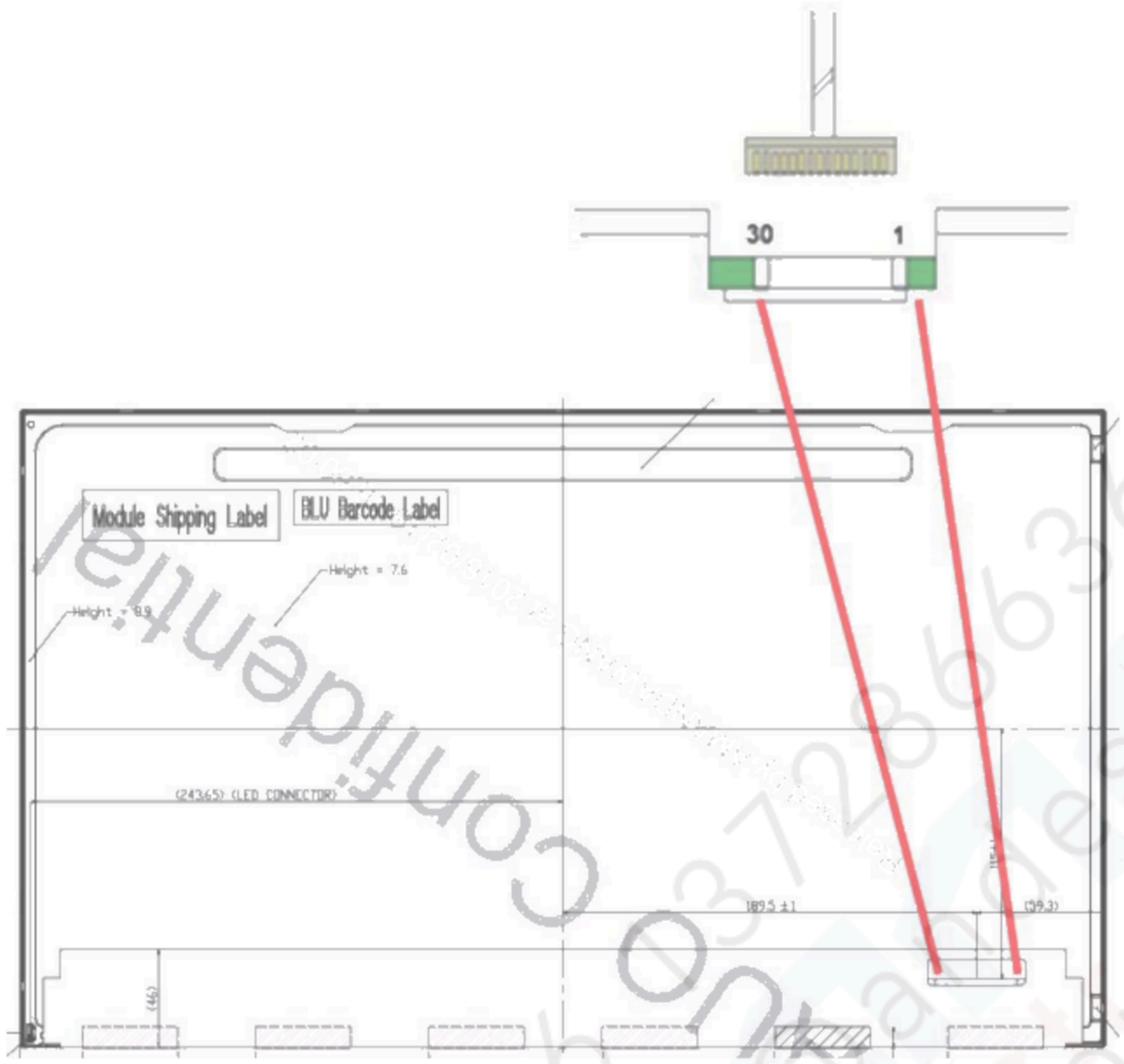

Note2: Input signals of clock shall be the same timing.

Note3: Please follow TV VESA Pin Assignment

AUO Confidential
Tel: +86 0372 3663670
Email: andesource@andesource.com
www.andesource.com

6.4 Timing Characteristics

Signal	Item	Symbol	Min	Typ	Max	Unit
V-section	Period	Tv	1094	1130	1836	Th
	Active	Tdisp(v)	1080	1080	1080	Th
	Blanking	Tbp(v)+Tfp(v)+PWvs	14	50	756	Th
H-section	Period	Th	1000	1050	1678	Tclk
	Active	Tdisp(h)	960	960	960	Tclk
	Blanking	Tbp(h)+Tfp(h)+PWhs	40	90	718	Tclk
Clock	Period	Tclk	11.2	14	18.6	ns
	Frequency	Freq.	53.7	71.2	90	MHz
Frame Rate	Frame Rate	1/Tv	49	60	76	Hz

Note 1: Only DE mode operation.
The input of Hsync & Vsync signal does not have an effect upon the LCD normal operation.
Note 2: The performance of the electro-optical characteristics may be influenced by variance of the vertical refresh rates.
Note 3: Horizontal period should be even.

Tel:+86 13728663670
Email:andeic@andesource.com
www.andesource.com

6.5 Timing diagram

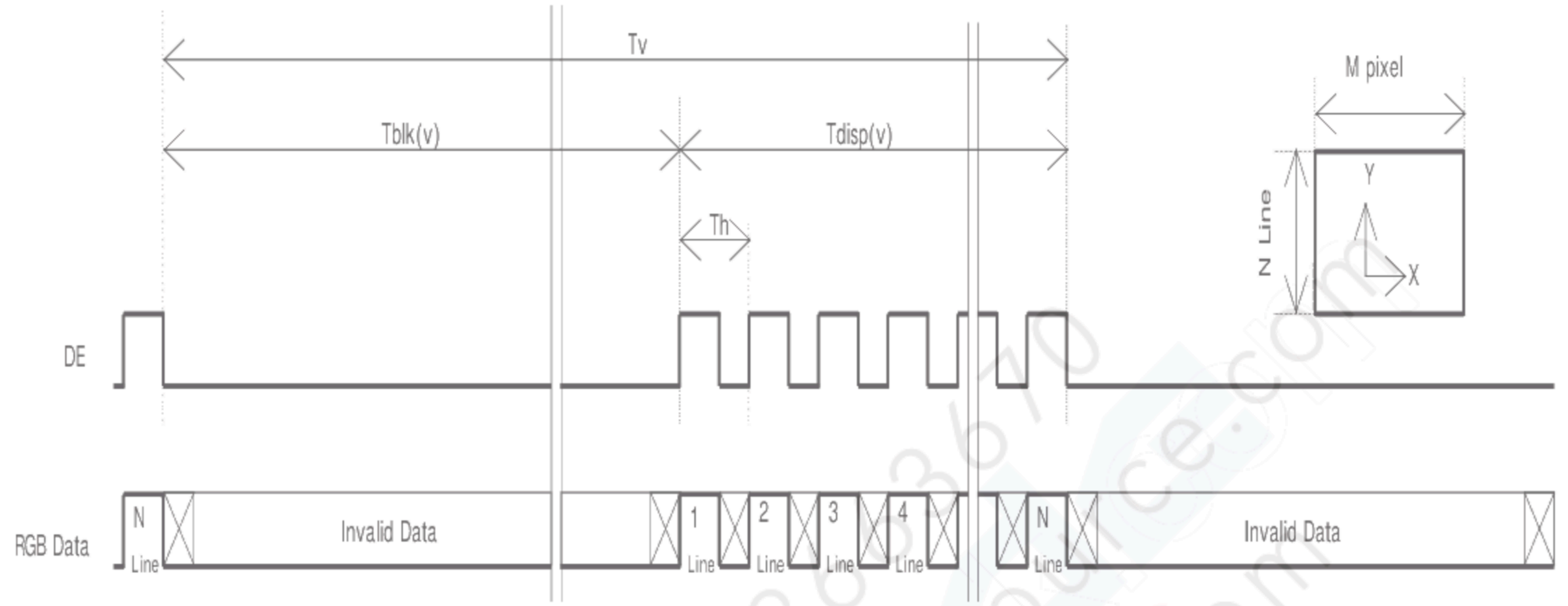

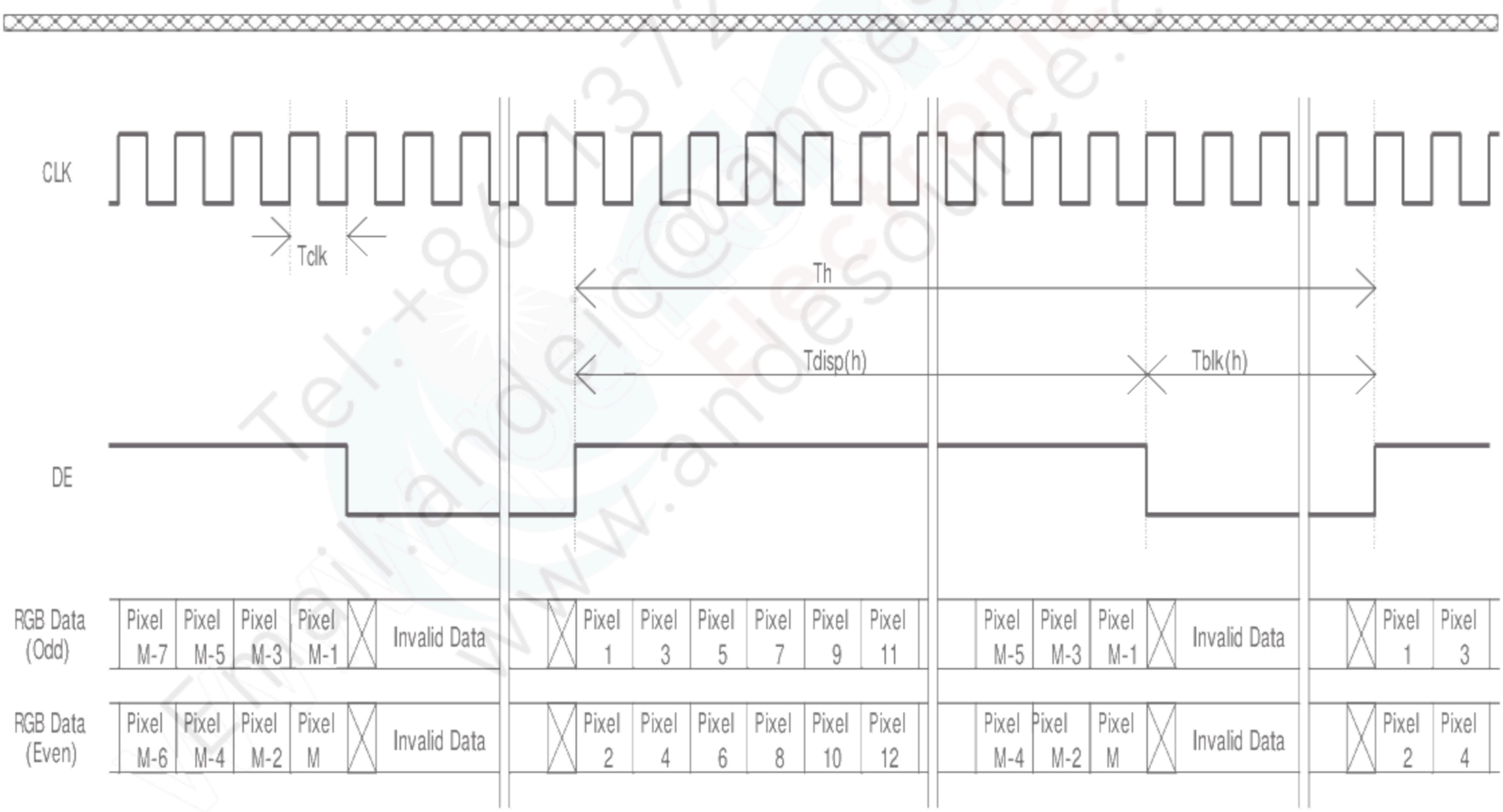

6.6 Power ON/OFF Sequence

VDD power and LED on/off sequence are as follows. Interface signals are also shown in the chart. Signals from any system shall be Hi-Z state or low level when VDD is off.

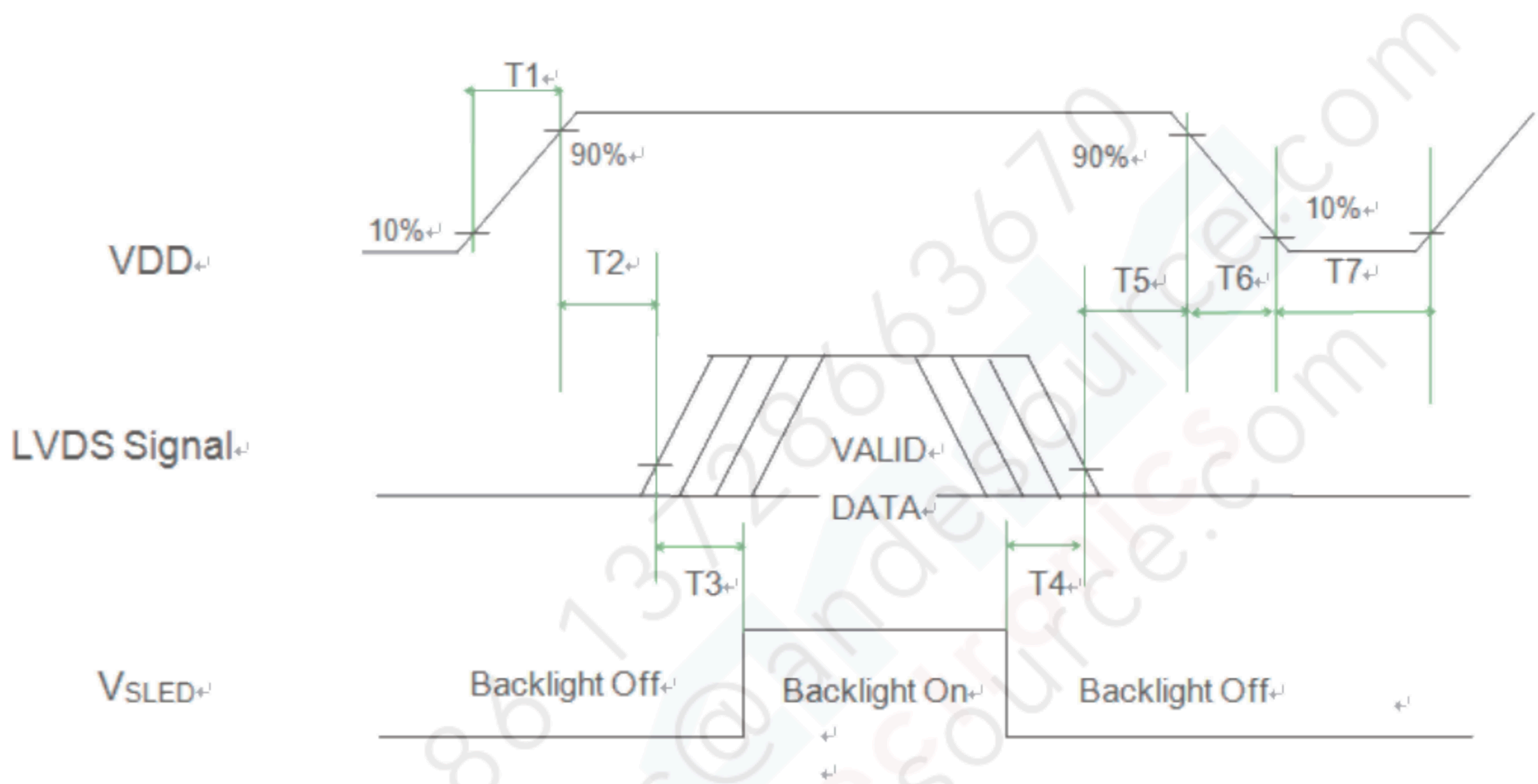

Power ON/OFF sequence timing

Parameter	Value			Units	Remark
	Min.	Typ.	Max.		
T1	0.5	-	10	[ms]	
T2	0	-	50	[ms]	
T3	500	-	-	[ms]	
T4	100	-	-	[ms]	
T5	0		50	[ms]	Note 1, 2
T6	0	-	200	[ms]	Note 2, 3
T7	1000	-	-	[ms]	

Note 1 : Recommend setting T5 = 0ms to avoid electronic noise when VDD is off.
Note 2 : During T5 and T6 period , please keep the level of input LVDS signals with Hi-Z state.
Note 3 : Voltage of VDD must decay smoothly after power-off.(customer system decide this value)

7.0 Connector & Pin Assignment

Physical interface is described as for the connector on module. These connectors are capable of accommodating the following signals and will be following components.

7.1 TFT LCD Module

Connector Name / Designation	Interface Connector / Interface card
Manufacturer	STM/P-TWO
Type Part Number	MSBKT2407P30HB/ I87034-3009
Mating Housing Part Number	JAE/FI-X30HL(unlocked Type)

7.1.1 Pin Assignment

Pin#	Signal Name	Pin#	Signal Name
1	RxOIN0-	2	RxOIN0+
3	RxOIN1-	4	RxOIN1+
5	RxOIN2-	6	RxOIN2+
7	GND	8	RxOCLKIN-
9	RxOCLKIN+	10	RxOIN3-
11	RxOIN3+	12	RxEIN0-
13	RxEIN0+	14	GND
15	RxEIN1-	16	RxEIN1+
17	GND	18	RxEIN2-
19	RxEIN2+	20	RxECLKIN-
21	RxECLKIN+	22	RxEIN3-
23	RxEIN3+	24	GND
25	Aging	26	SCL For PVCOM
27	SDA For PVCOM	28	VDD
29	VDD	30	VDD

Tel:+86 13728663870 Email:andeic@andesource.com www.andesource.com

7.2 LED Backlight Unit: LED Connector

Connector Name / Designation	LED Connector
Manufacturer	ENTERY
Connector Model Number	3707K-S06N-21R
Mating Connector Model Number	H112K-P06N-00B (Non-Locking type) H112K-P06N-13B (Locking type)

7.3 LED Connector Pin Assignment

Pin#	Symbol	Description
1	Ch1	LED Current Feedback Terminal (Channel 1)
2	Ch2	LED Current Feedback Terminal (Channel 2)
3	V_{SLED}	LED Power Supply Voltage Input Terminal
4	V_{SLED}	LED Power Supply Voltage Input Terminal
5	Ch3	LED Current Feedback Terminal (Channel 3)
6	Ch4	LED Current Feedback Terminal (Channel 4)

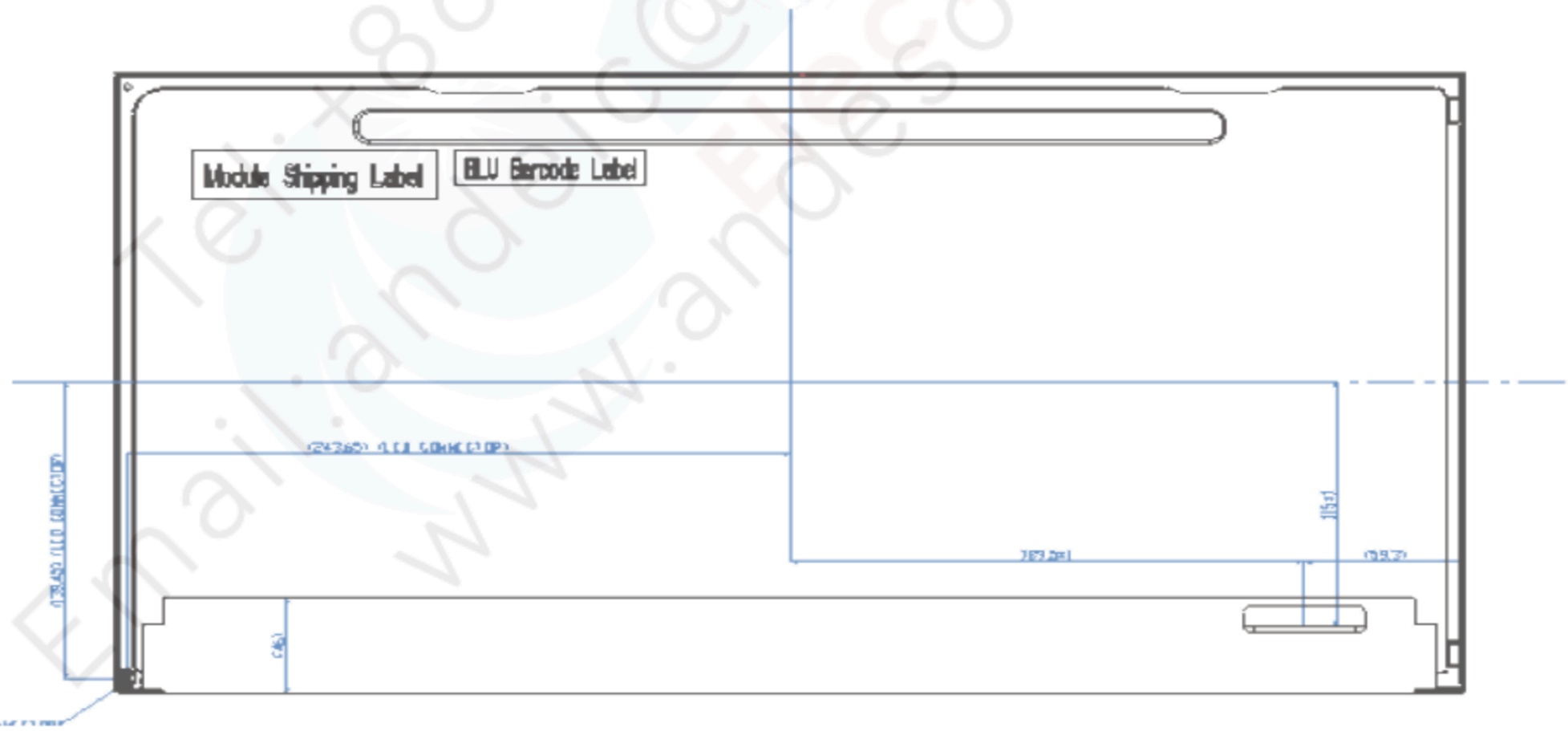

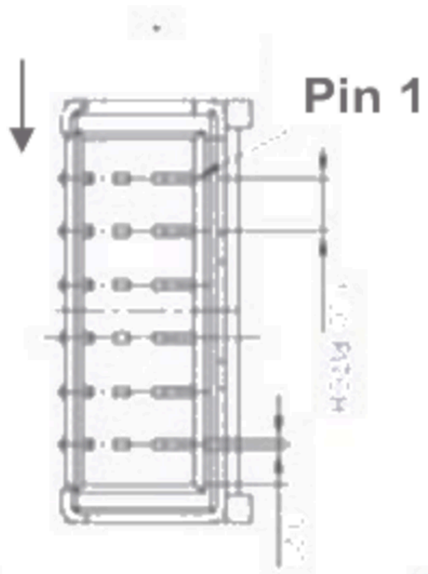

Tel:+86 13726636706
Email:andesource@andesource.com
www.andesource.com

8.0 Reliability Test

Environment test conditions are listed as following table.

Items	Required Condition	Note
Temperature Humidity Bias (THB)	Ta= 50°C, 80%RH, 300hours	
High Temperature Operation (HTO)	Ta= 60°C, 300hours	
Low Temperature Operation (LTO)	Ta= 0°C, 300hours	
High Temperature Storage (HTS)	Ta= 60°C, 300hours	
Low Temperature Storage (LTS)	Ta= -20°C, 300hours	
Vibration Test (Non-operation)	Acceleration: 1.5 Grms Wave: Random Frequency: 10 - 200 Hz Sweep: 30 Minutes each Axis (X, Y, Z)	
Shock Test (Non-operation)	Acceleration: 50 G Wave: Half-sine Active Time: 20 ms Direction: ±X, ±Y, ±Z (one time for each Axis)	
Thermal Shock Test (TST)	-20°C /30min, 60°C /30min, 100 cycles	*1*
On/Off Test	On/10sec, Off/10sec, 30,000 cycles	
ESD (Electro Static Discharge)	Contact Discharge: ± 8KV, 150pF(330Ω) 1sec, 8 points, 25 times/ point.	*2*
	Air Discharge: ± 15KV, 150pF(330Ω) 1sec 8 points, 25 times/ point.	

Note 1: The TFT-LCD module will not sustain damage after being subjected to 100 cycles of rapid temperature change. A cycle of rapid temperature change consists of varying the temperature from -20°C to 60°C, and back again. Power is not applied during the test. After temperature cycling, the unit is placed in normal room ambient for at least 4 hours before power on.

Note 2: According to EN61000-4-2 , ESD class B: Some performance degradation allowed. No data lost. Self-recoverable. No hardware failures.

Note 3 : Mura shall be ignored after high temperature reliability test.

9.0 Shipping Label & Packaging

9.1 Shipping Label

The label is on the panel as shown below:

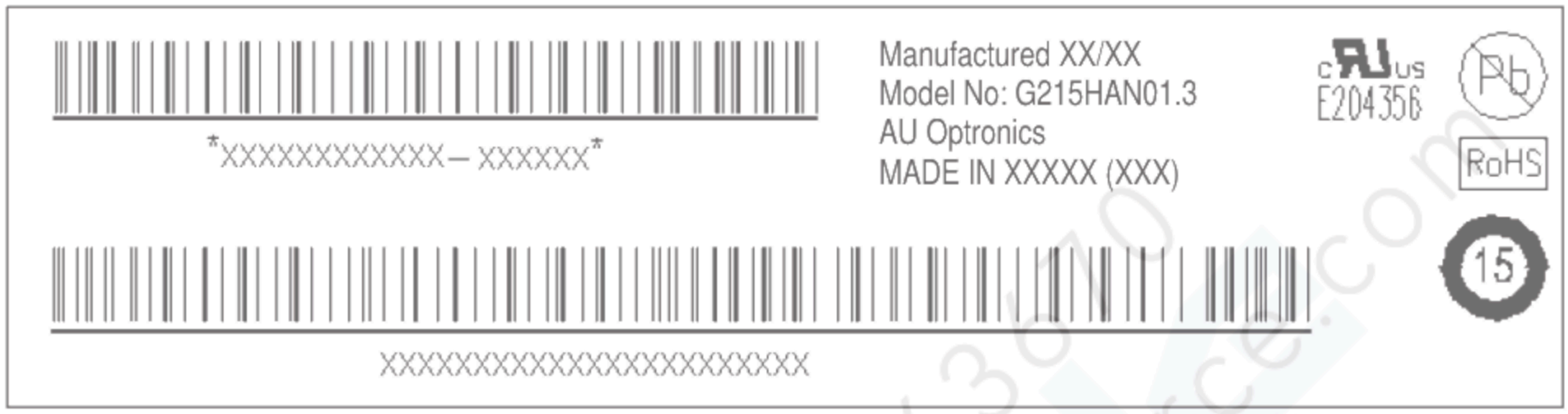

Note 1: For Pb Free products, AUO will add Pb for identification.

Note 2: For RoHS compatible products, AUO will add RoHS for identification.

Note 3: For China RoHS compatible products, AUO will add 15 for identification.

Note 4: The Green Mark will be presented only when the green documents have been ready by AUO Internal Green Team.

Tel:+86 13728663870
Email:andeic@andesource.com
www.andesourceelectronics.com

9.2 Packaging

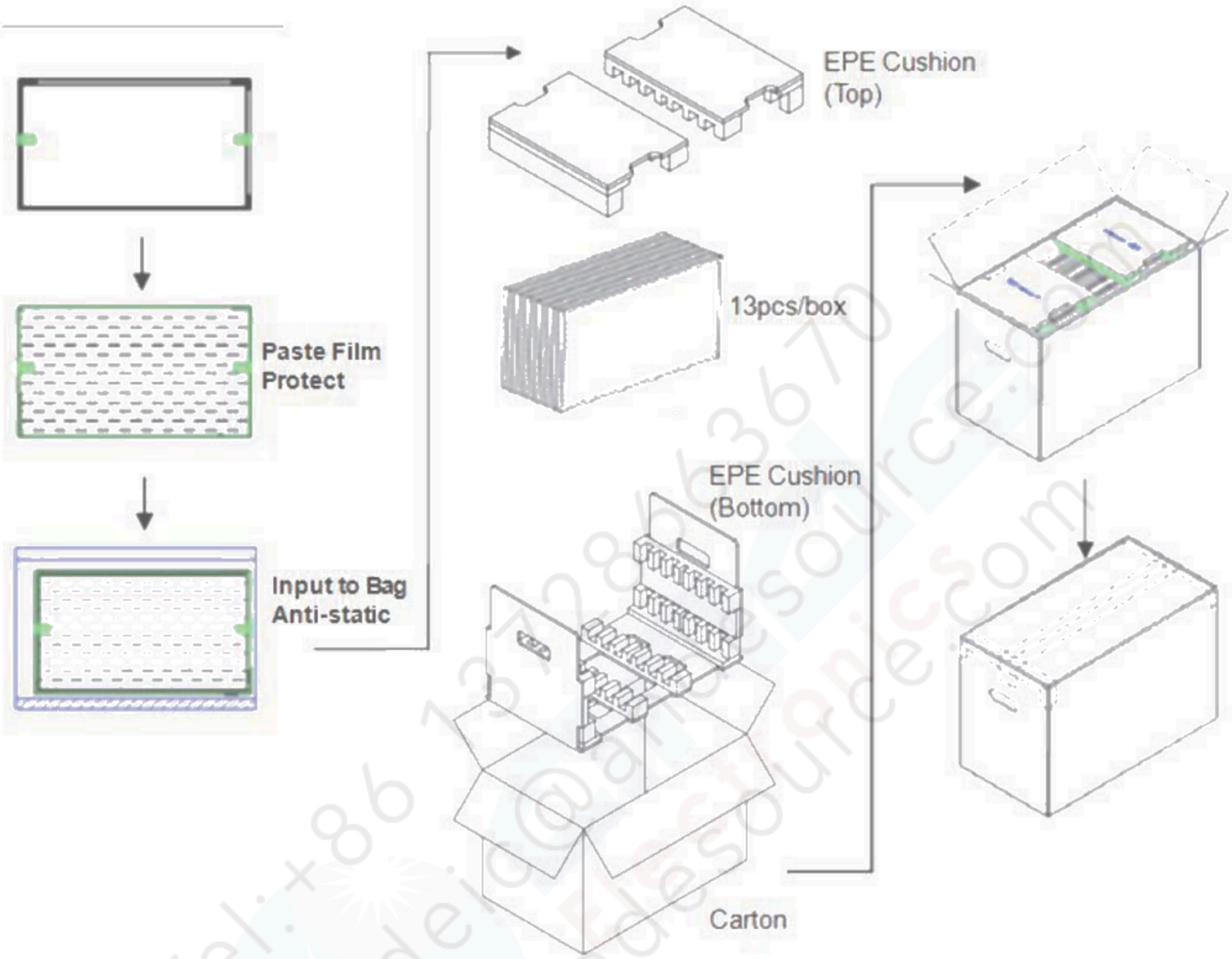

9.3 Palletizing and shipment information

Item	Specification			Remark
	Q'ty	Dimension	Weight(kg)	
Panel	1	497.6(H)mm × 292.2(V)mm × 10.5(D)mm	1.74	
Cushion	1	-	0.55	
Box	1	565(L)mm x 345(W)mm x 375(H)mm	1.40	without Panel
Packing Box	13pcs/Box	565(L)mm x 345(W)mm x 375(H)mm	24.57	with panel & Box & cushion
Pallet	1	1150(L)mm x 1070(W)mm x 132(H)mm	14.2	
Pallet after Packing	18 boxes/pallet	1150(L)mm x 1070(W)mm x 1257(H)mm	456.46	

10.0 Mechanical Characteristics

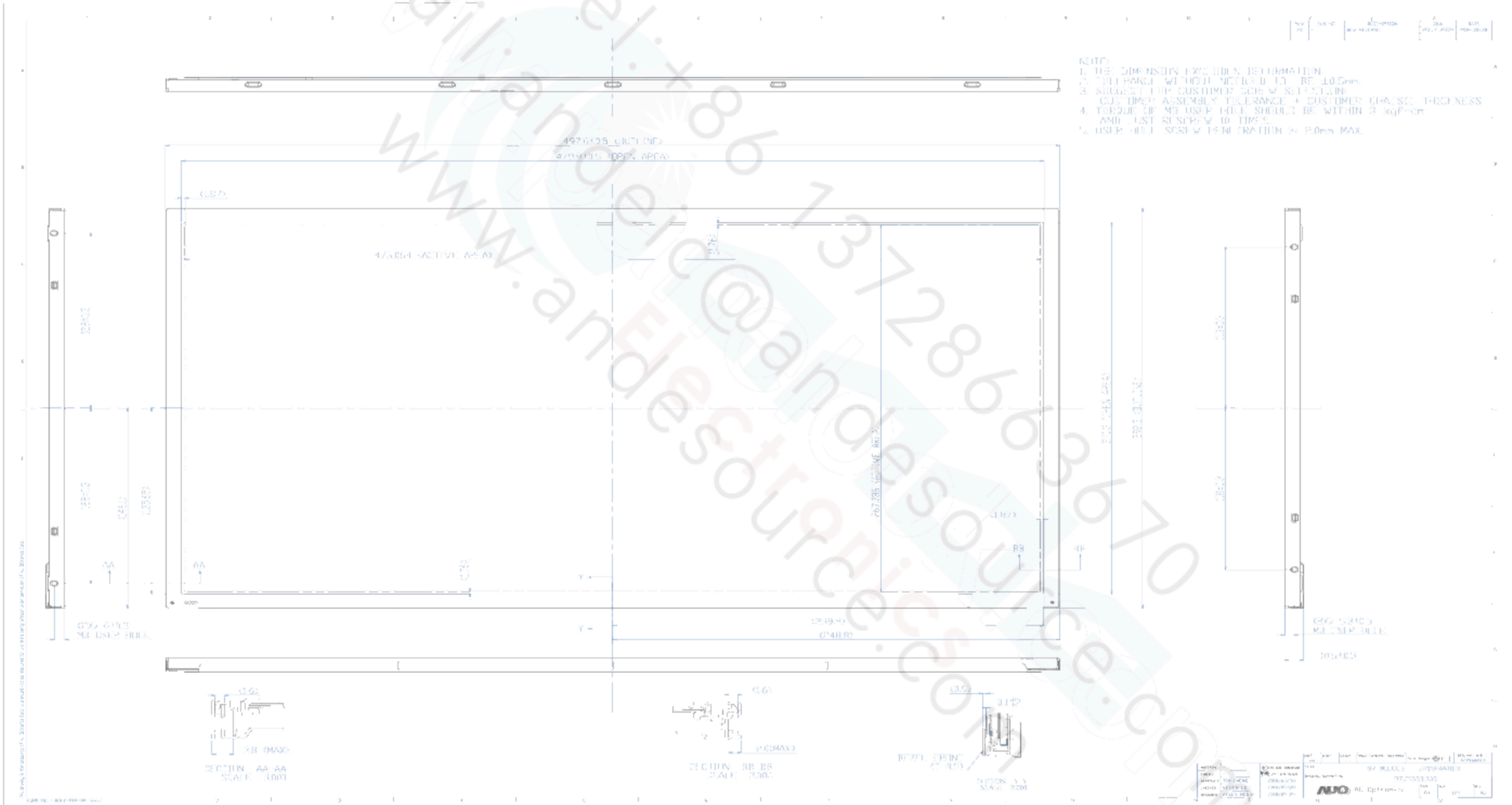

Email:anderic@anhesource.com
Tel:+86 13728663670
www.anhesource.com
ElectronicsEsource

Email:ande1c@ande.com
Tel:+86 13728663670
www.andesource.com
ElectronicsCom

11 Safety

11.1 Sharp Edge Requirements

There will be no sharp edges or comers on the display assembly that could cause injury.

11.2 Materials

11.2.1 Toxicity

There will be no carcinogenic materials used anywhere in the display module. If toxic materials are used, they will be reviewed and approved by the responsible AUO toxicologist.

11.2.2 Flammability

All components including electrical components that do not meet the flammability grade UL94-V1 in the module will complete the flammability rating exception approval process.

The printed circuit board will be made from material rated 94-V1 or better. The actual UL flammability rating will be printed on the printed circuit board.

11.3 Capacitors

If any polarized capacitors are used in the display assembly, provisions will be made to keep them from being inserted backwards.

11.4 National Test Lab Requirement

The display module will satisfy all requirements for compliance to:

UL 60950-1, Second Edition	U.S.A. Information Technology Equipment

Tel:+86 13728663670
Email:andeic@andesourceelectronics.com
www.andesourceelectronics.com