( ) Preliminary Specification
(V) Final Specification

Module	19.5” Color TFT-LCD
Model Name	M195XTN01.0

Customer	Date	Approved by	Date
		Howard Lee	Dec 20, 2013
Approved by		Prepared by	Date
		Vincent Chan	Dec 20, 2013
Note: This Specification is subject to change without notice.		AU Optronics corporation	

Contents

Record of Revision

Version	Date	Page	Old description	New Description	Remark
0.0	2013/10/17	All	First version release	-	
1.0	2013/12/20	5	2.1 Display Characteristics Weight : 1430	2.1 Display Characteristics Weight : 1380	
		14	3.3.2 Recommended Operating Condition 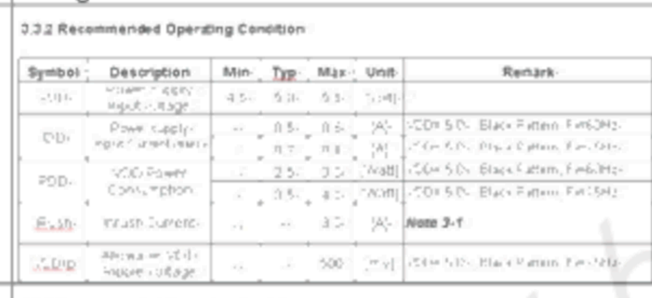	3.3.2 Recommended Operating Condition 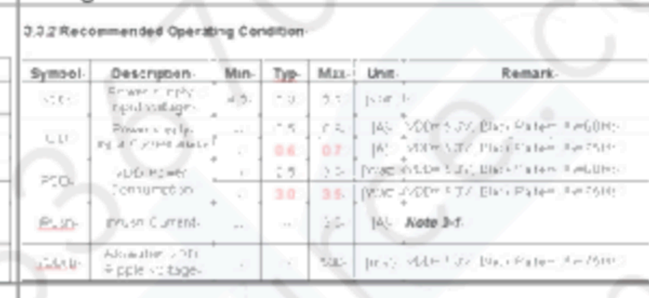	
		26	4.3.2 Recommended Operating Condition 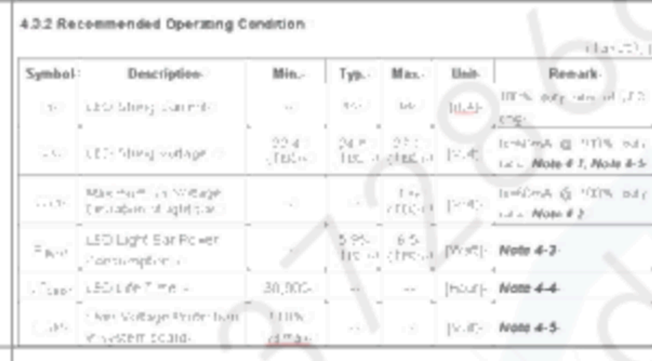	4.3.2 Recommended Operating Condition 	
		27	Note 4-1: 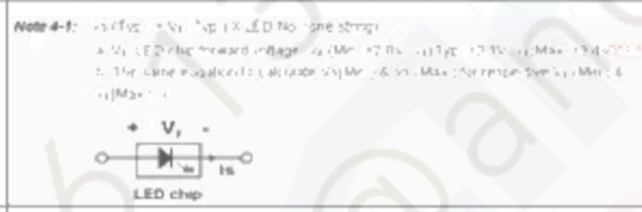	Note 4-1: 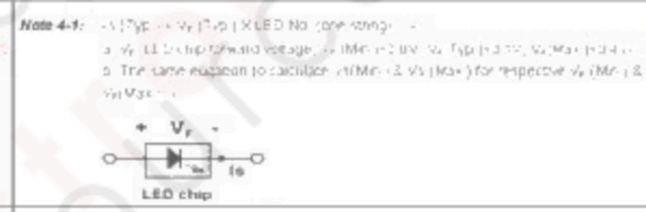	
		30	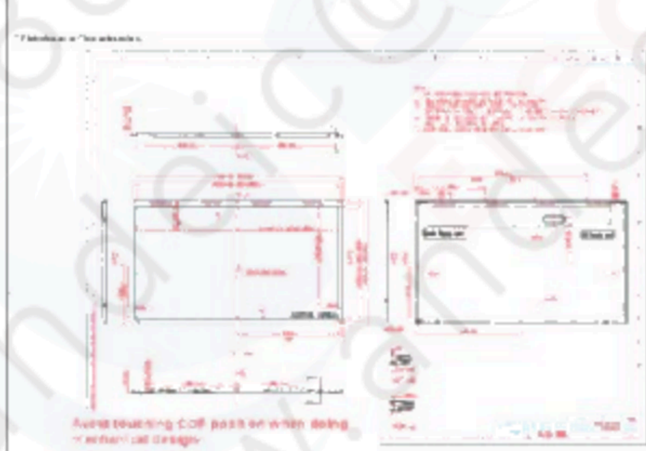	Modify note description 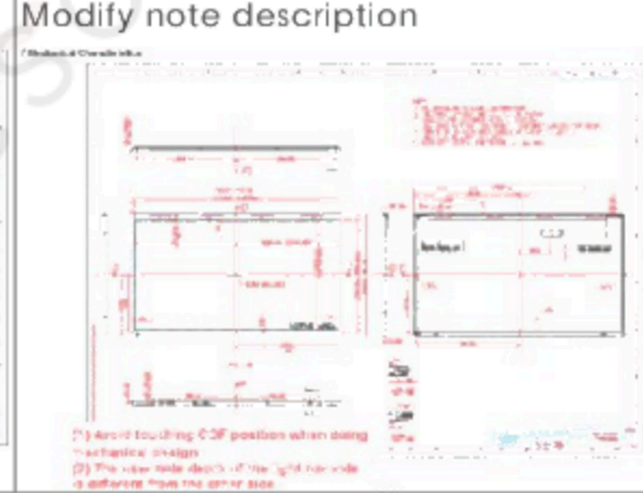	
		32	8.2 Pallet and shipment information 	8.2 Pallet and shipment information 	

1 Handling Precautions

1) Since front polarizer is easily damaged, pay attention not to scratch it.
2) Be sure to turn off power supply when inserting or disconnecting from input connector.
3) Wipe off water drop immediately. Long contact with water may cause discoloration or spots.
4) When the panel surface is soiled, wipe it with absorbent cotton or other soft cloth.
5) Since the panel is made of glass, it may break or crack if dropped or bumped on hard surface.
6) Since CMOS LSI is used in this module, take care of static electricity and insure human earth when handling.
7) Do not open or modify the Module Assembly.
8) Do not press the reflector sheet at the back of the module to any directions.
9) In case a TFT-LCD Module has to be put back into the packing container slot after once it was taken out from the container, do not press the center of the LED lightbar edge. Otherwise the TFT-LCD Module may be damaged.
10) Insert or pull out the interface connector, be sure not to rotate nor tilt it of the TFT-LCD Module.
11) Do not twist nor bend the TFT -LCD Module even momentary. It should be taken into consideration that no bending/twisting forces are applied to the TFT-LCD Module from outside. Otherwise the TFT-LCD Module may be damaged.
12) Please avoid touching COF position while you are doing mechanical design.
13) When storing modules as spares for a long time, the following precaution is necessary: Store them in a dark place. Do not expose the module to sunlight or fluorescent light. Keep the temperature between 5℃ and 35℃ at normal humidity.

2 General Description

This specification applies to the 19.5 inch wide Color a-Si TFT-LCD Module M195XTN01.0. The display supports the HD - 1366(H) x 768(V) screen format and 16.7M colors (RGB 6-bits + Hi-FRC data). The input interface is 1-channel LVDS and this module doesn't contain an driver board for backlight.

2.1 Display Characteristics

The following items are characteristics summary on the table under 25℃ condition:

ITEMS	Unit	SPECIFICATIONS
Screen Diagonal	[mm]	493.92 (19.45")
Active Area	[mm]	434.0 (H) x 235.8 (V)
Pixels H x V	-	1366(x3) x 768
Pixel Pitch	[um]	317.7 (per one triad) ×307
Pixel Arrangement	-	R.G.B. Vertical Stripe
Display Mode	-	TN Mode, Normally White
White Luminance (Center)	[cd/m^2]	200 (Typ.)
Contrast Ratio	-	600 (Typ.)
Response Time	[msec]	5 (Typ., on/off)
Power Consumption (LCD Module + Backligh unit)	[Watt]	8.5 (Typ.) LCD module : PDD (Typ.)=2.5 @ Black pattern,Fv=60Hz Backlight unit : P_{BLU} (Typ.) =5.95 @Is=60mA
Weight	[Grams]	1380
Outline Dimension	[mm]	452(H) × 263(V) × 10.5(D) Typ.
Electrical Interface	-	1 channel LVDS
Support Color	-	16.7M colors (RGB 6-bit + Hi_FRC)
Surface Treatment	-	Anti-Glare, 3H
Temperature Range Operating Storage (Shipping)	 [°C] [°C]	 0 to +50 -20 to +60
RoHS Compliance	-	RoHS Compliance

2.2 Absolute Maximum Rating of Environment

Permanent damage may occur if exceeding the following maximum rating.

Symbol	Description	Min.	Max.	Unit	Remark
TOP	Operating Temperature	0	+50	[°C]	***Note 2-1***
TGS	Glass surface temperature (operation)	0	+65	[°C]	***Note 2-1*** *Function judged only*
HOP	Operation Humidity	5	90	[%RH]	***Note 2-1***
TST	Storage Temperature	-20	+60	[°C]	
HST	Storage Humidity	5	90	[%RH]	

Note 2-1: Temperature and relative humidity range are shown as the below figure.

1. 90% RH Max (Ta ≦39℃)
2. Max wet-bulb temperature at 39℃ or less. (Ta ≦39℃)
3. No condensation

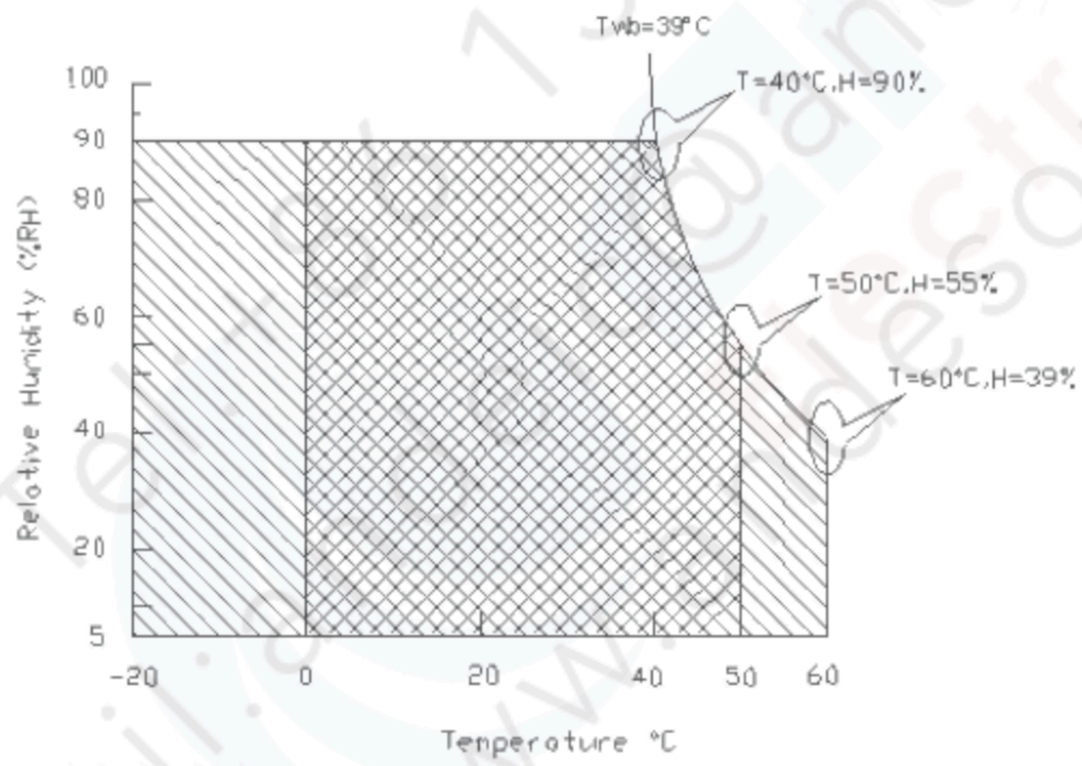

Operating Range Storage Range

2.3 Optical Characteristics

The optical characteristics are measured on the following test condition.

Test Condition:

1. Equipment setup: Please refer to ***Note 2-2***.
2. Panel Lighting time: 30 minutes
3. VDD=5.0V, Fv=60Hz,Is=60mA,Ta=25℃

Symbol	Description		Min.	Typ.	Max.	Unit	Remark
L_w	White Luminance (Center of screen)		160	200	-	[cd/m2]	***Note 2-2*** *By SR-3*
L_{uni}	Luminance Uniformity (9 points)		75	80	-	[%]	***Note 2-3*** *By SR-3*
CR	Contrast Ratio (Center of screen)		360	600	-	-	***Note 2-4*** *By SR-3*
θ_R	Horizontal Viewing Angle (CR=10)	Right	35	45	-	[degree]	***Note 2-5*** *By SR-3*
θ_L		Left	35	45	-		
Φ_H	Vertical Viewing Angle (CR=10)	Up	15	20	-		
Φ_L		Down	40	45	-		
θ_R	Horizontal Viewing Angle (CR=5)	Right	35	45	-		
θ_L		Left	35	45	-		
Φ_H	Vertical Viewing Angle (CR=5)	Up	15	20	-		
Φ_L		Down	40	45	-		
T_R	Response Time	Rising Time	-	3.8	5.5	[msec]	***Note 2-6*** *By TRD-100*
T_F		Falling Time	-	1.2	2.5		
-		Rising + Falling	-	5	8		
R_x	Color Coordinates (CIE 1931)	Red x	0.614	0.644	0.674	-	*By SR-3*
R_y		Red y	0.303	0.333	0.363		
G_x		Green x	0.292	0.322	0.352		
G_y		Green y	0.593	0.623	0.653		
B_x		Blue x	0.125	0.155	0.185		
B_y		Blue y	0.028	0.058	0.088		
W_x		White x	0.283	0.313	0.343		
W_y		White y	0.299	0.329	0.359		
CT	Crosstalk		-	-	1.5	[%]	***Note 2-7*** *By SR-3*
F_{dB}	Flicker (Center of screen)		-	-	-20	[dB]	***Note 2-8*** *By SR-3*

Note 2-2: Equipment setup :

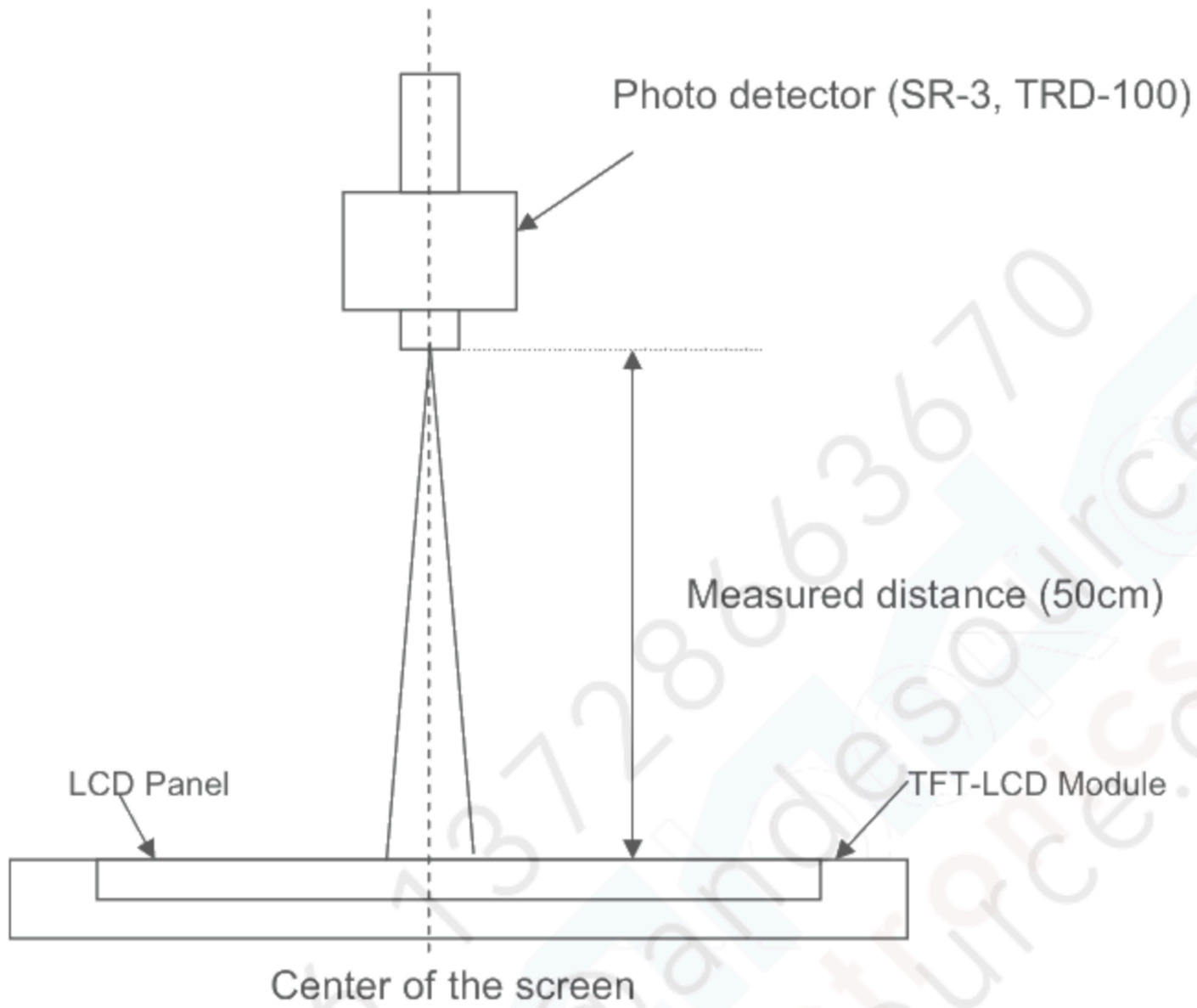

Note 2-3: Luminance Uniformity Measurement

Definition:

$$\text{Luminance Uniformity} = \frac{\text{Minimum Luminance of 9 Points (P1 ~ P9)}}{\text{Maximum Luminance of 9 Points (P1 ~ P9)}}$$

a.Test pattern: White Pattern

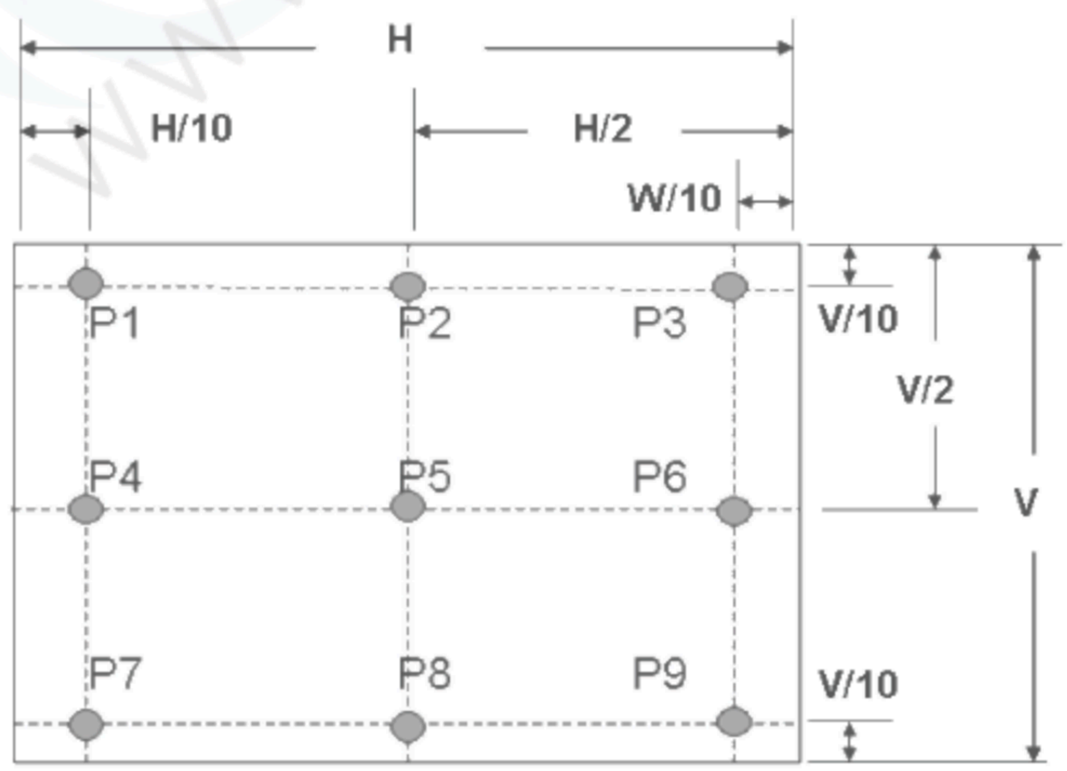

Note 2-4: Contrast Ratio Measurement

Definition:

$$\text{Contrast Ratio} = \frac{\text{Luminance of White pattern}}{\text{Luminance of Black pattern}}$$

a. Measured position: Center of screen (P5) & perpendicular to the screen (θ=Φ=0°)

Note 2-5: Viewing angle measurement

Definition: The angle at which the contrast ratio is greater than 10 & 5 .

a. Horizontal view angle: Divide to left & right (θ_L & θ_R)
Vertical view angle: Divide to up & down (Φ_H &Φ_L)

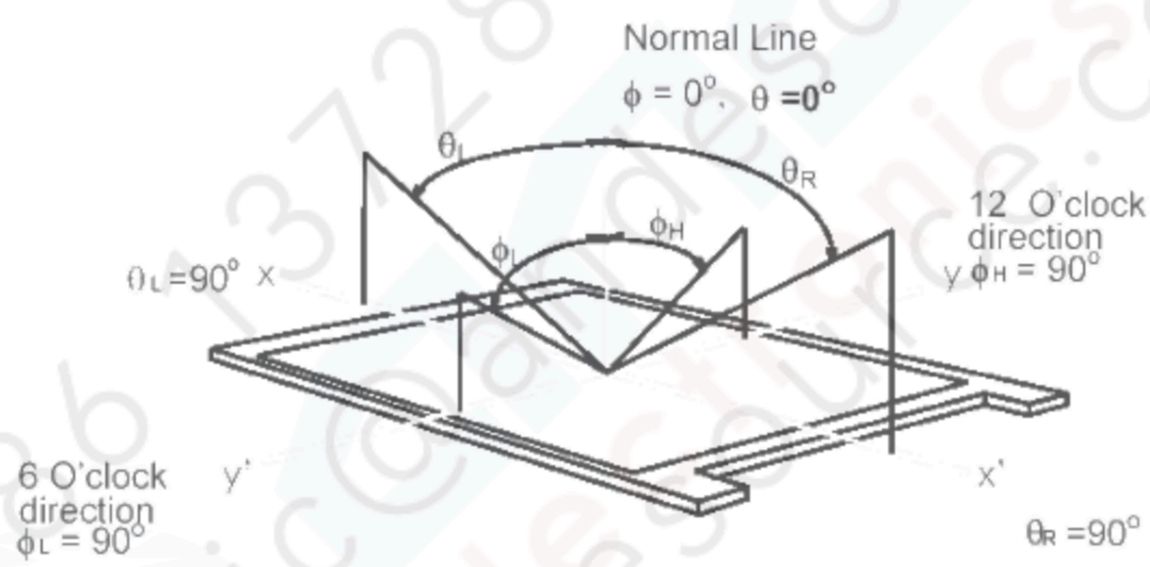

Note 2-6: Response time measurement

The output signals of photo detector are measured when the input signals are changed from "Black" to "White" (rising time, T_R), and from "White" to "Black" (falling time, T_F), respectively. The response time is interval between the 10% and 90% of optical response. (*Black & White color definition: Please refer section 3.4.3)*

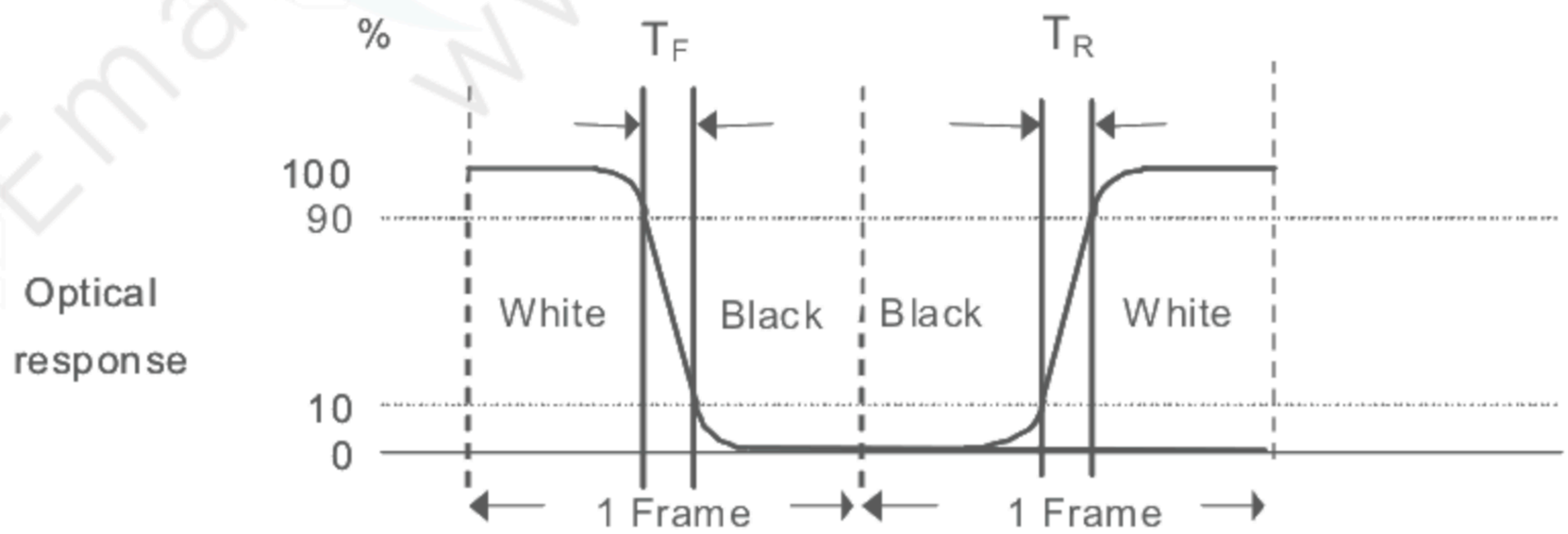

Note 2-7: Crosstalk measurement

Definition:

$CT = Max. (CT_H, CT_V)$;

Where

a.Maximum Horizontal Crosstalk :

$CT_H = Max. (| Y_{BL} – Y_{AL} | / Y_{AL} \times 100\ \%, | Y_{BR} – Y_{AR} | / Y_{AR} \times 100\ \%)$;

Maximum Vertical Crosstalk:

$CT_V = Max. (| Y_{BU} – Y_{AU} | / Y_{AU} \times 100\ \%, | Y_{BD} – Y_{AD} | / Y_{AD} \times 100\ \%)$;

b. Y_{AU}, Y_{AD}, Y_{AL}, Y_{AR} = Luminance of measured location without Black pattern

Y_{BU}, Y_{BD}, Y_{BL}, Y_{BR} = Luminance of measured location with Black pattern

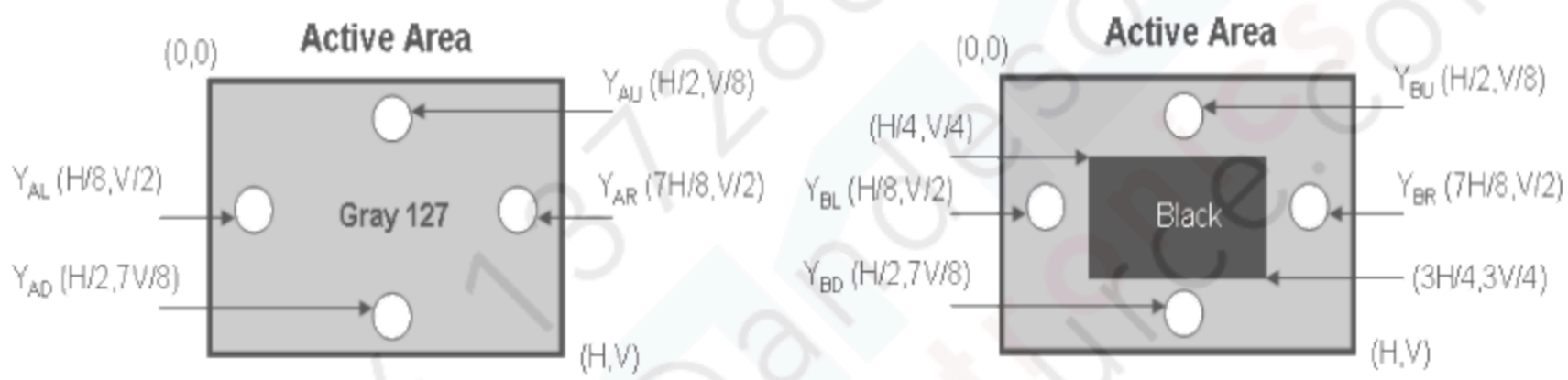

Note 2-8: Flicker measurement

a. Test pattern: It is listed as following.

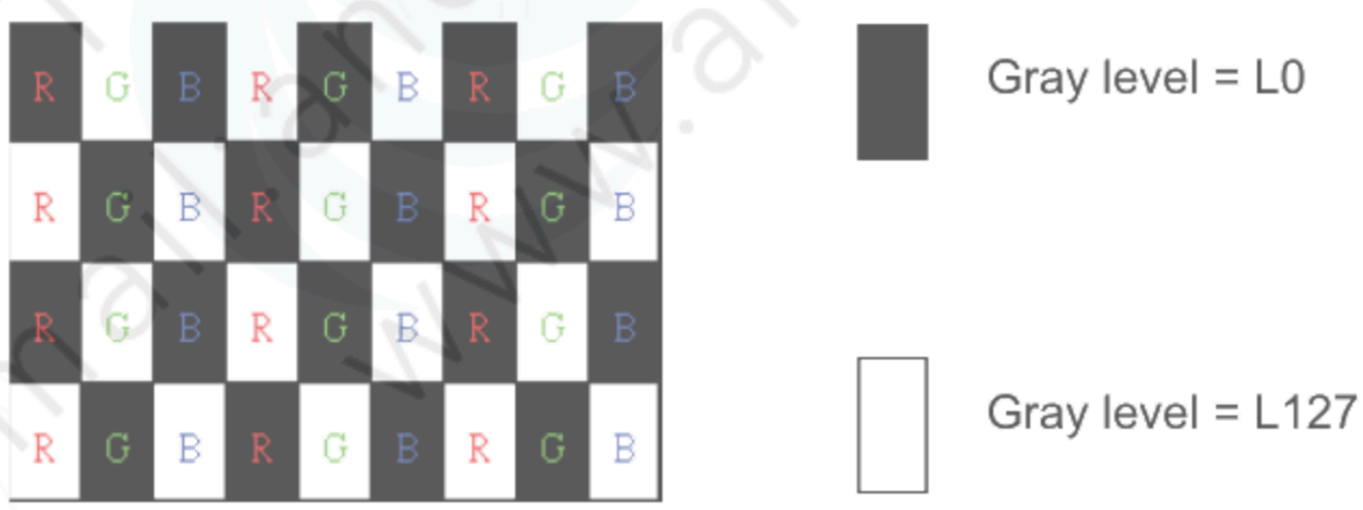

R: Red, G: Green, B:Blue

b. Measured position: Center of screen (P5) & perpendicular to the screen (θ=Φ=0°)

3 TFT-LCD Module

3.1 Block Diagram

The following shows the block diagram of the 19.5 inch Color TFT-LCD Module.

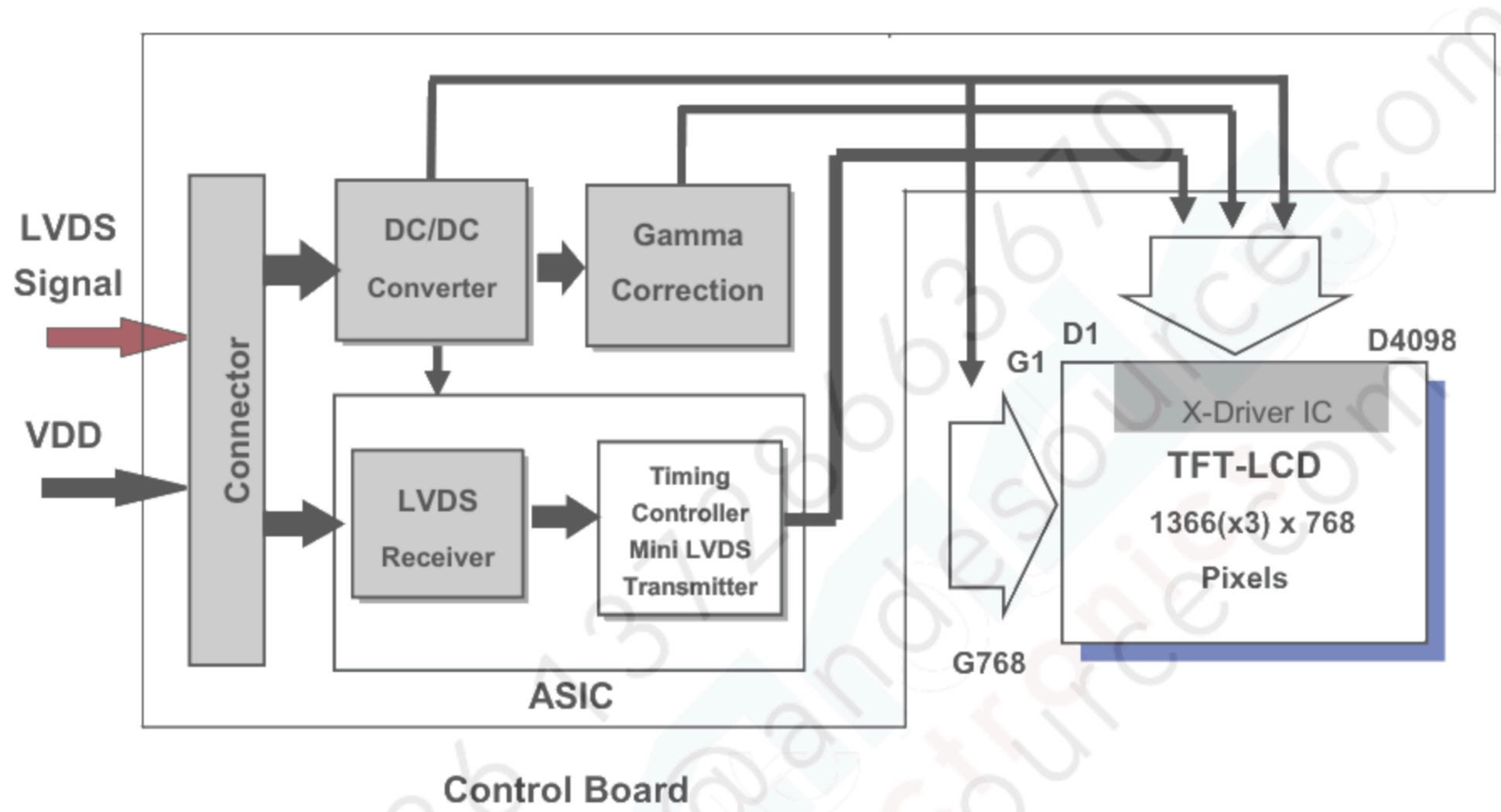

3.2 Interface Connection

3.2.1 Connector Type

TFT-LCD Connector	Manufacturer	P-TWO	STM
	Part Number	AL230F-A0G1D-P	MSCKT2407P30HB
Mating Connector	Manufacturer	JAE	
	Part Number	FI-X30HL (Locked Type)	

3.2.2 Connector Pin Assignment

PIN #	Symbol	Description	Remark
1	NC	No connection	
2	NC	No connection	
3	NC	No connection	
4	NC	No connection	
5	NC	No connection	
6	NC	No connection	
7	GND	Ground	
8	NC	No connection	
9	NC	No connection	
10	NC	No connection	
11	NC	No connection	
12	RxIN0-	Negative LVDS differential data input	
13	RxIN0+	Positive LVDS differential data input	
14	GND	Ground	
15	RxIN1-	Negative LVDS differential data input	
16	RxIN1+	Positive LVDS differential data input	
17	GND	Ground	
18	RxIN2-	Negative LVDS differential data input	
19	RxIN2+	Positive LVDS differential data input	
20	RxCLKIN-	Negative LVDS differential clock input	
21	RxCLKIN+	Positive LVDS differential clock input	
22	RxIN3-	Negative LVDS differential data input	
23	RxIN3+	Positive LVDS differential data input	
24	NC	No connection (for AUO test only. Do not connect)	
25	NC	No connection (for AUO test only. Do not connect)	
26	NC	No connection (for AUO test only. Do not connect)	

27	NC	No connection (for AUO test only. Do not connect)	
28	VDD	Power Supply Input Voltage	
29	VDD	Power Supply Input Voltage	
30	VDD	Power Supply Input Voltage	

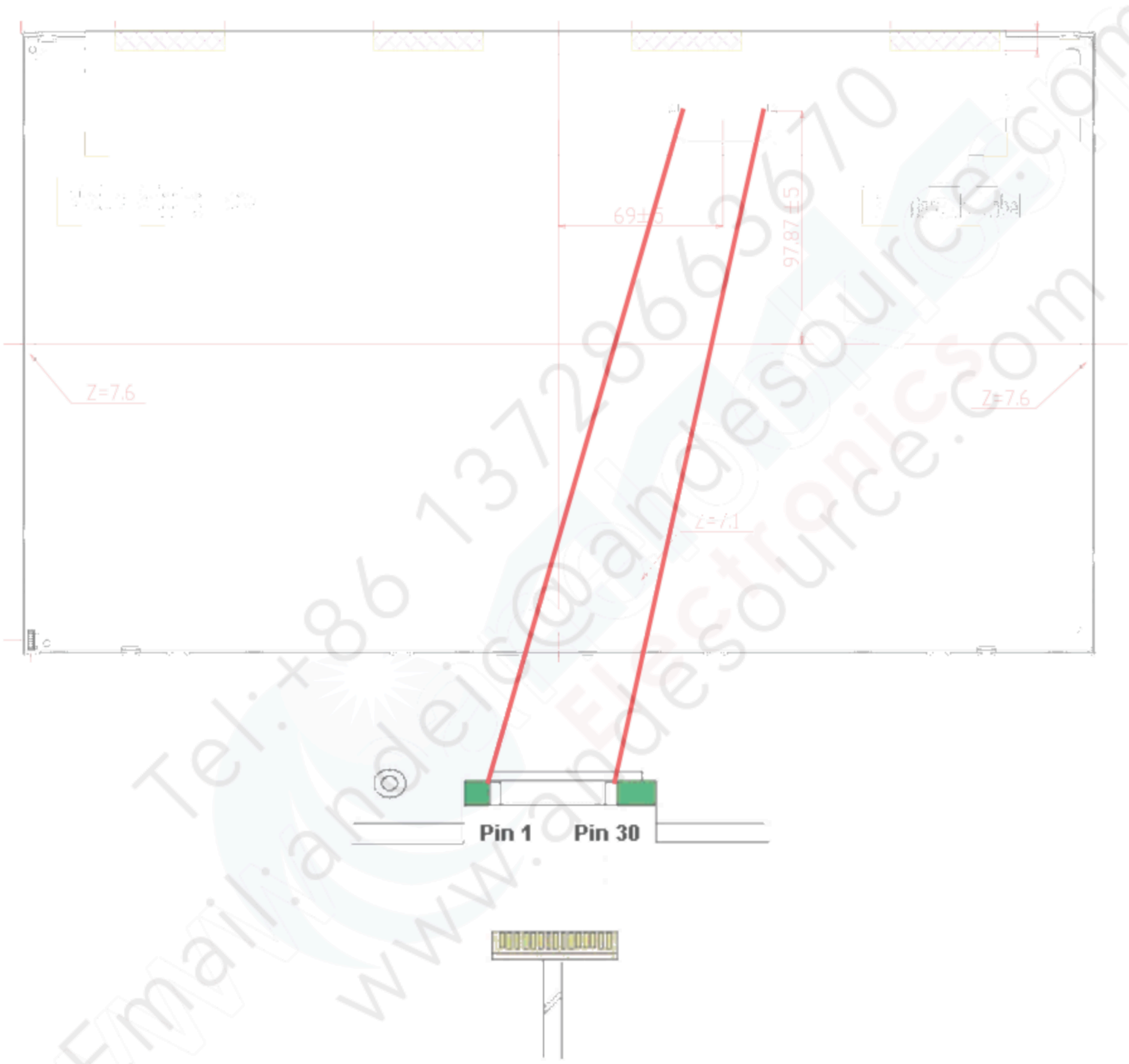

3.3 Electrical Characteristics

3.3.1 Absolute Maximum Rating

Permanent damage may occur if exceeding the following maximum rating.

Symbol	Description	Min	Max	Unit	Remark
VDD	Power Supply Input Voltage	GND-0.3	6.0	[Volt]	Ta=25℃

3.3.2 Recommended Operating Condition

Symbol	Description	Min	Typ	Max	Unit	Remark
VDD	Power supply Input voltage	4.5	5.0	5.5	[Volt]	
IDD	Power supply Input Current (RMS)	-	0.5	0.6	[A]	VDD= 5.0V, Black Pattern, Fv=60Hz
			0.6	0.7	[A]	VDD= 5.0V, Black Pattern, Fv=75Hz
PDD	VDD Power Consumption	-	2.5	3.0	[Watt]	VDD= 5.0V, Black Pattern, Fv=60Hz
			3.0	3.5	[Watt]	VDD= 5.0V, Black Pattern, Fv=75Hz
IRush	Inrush Current	-	-	3.0	[A]	***Note 3-1***
VDDrp	Allowable VDD Ripple Voltage	-	-	500	[mV]	VDD= 5.0V, Black Pattern, Fv=75Hz

Note 3-1: Inrush Current measurement:

Test circuit:

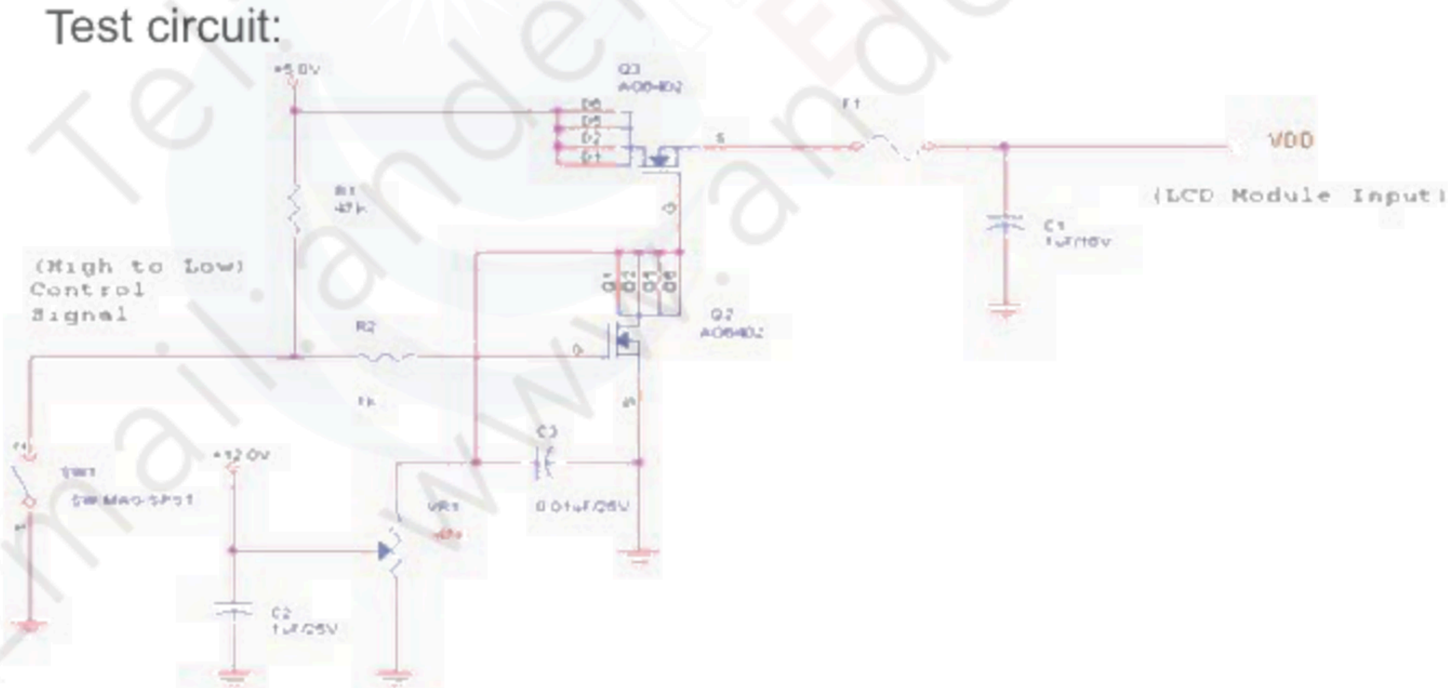

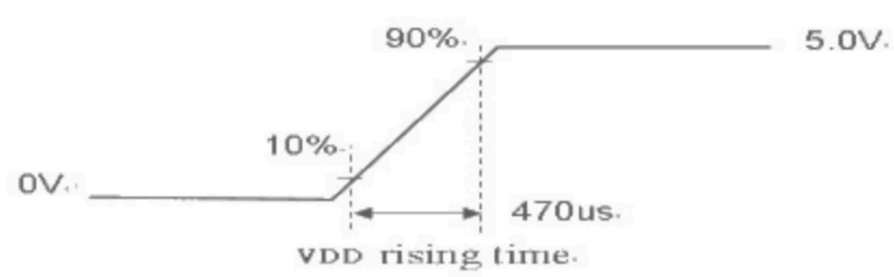

The duration of VDD rising time: 470us.

3.4 Signal Characteristics

3.4.1 LCD Pixel Format

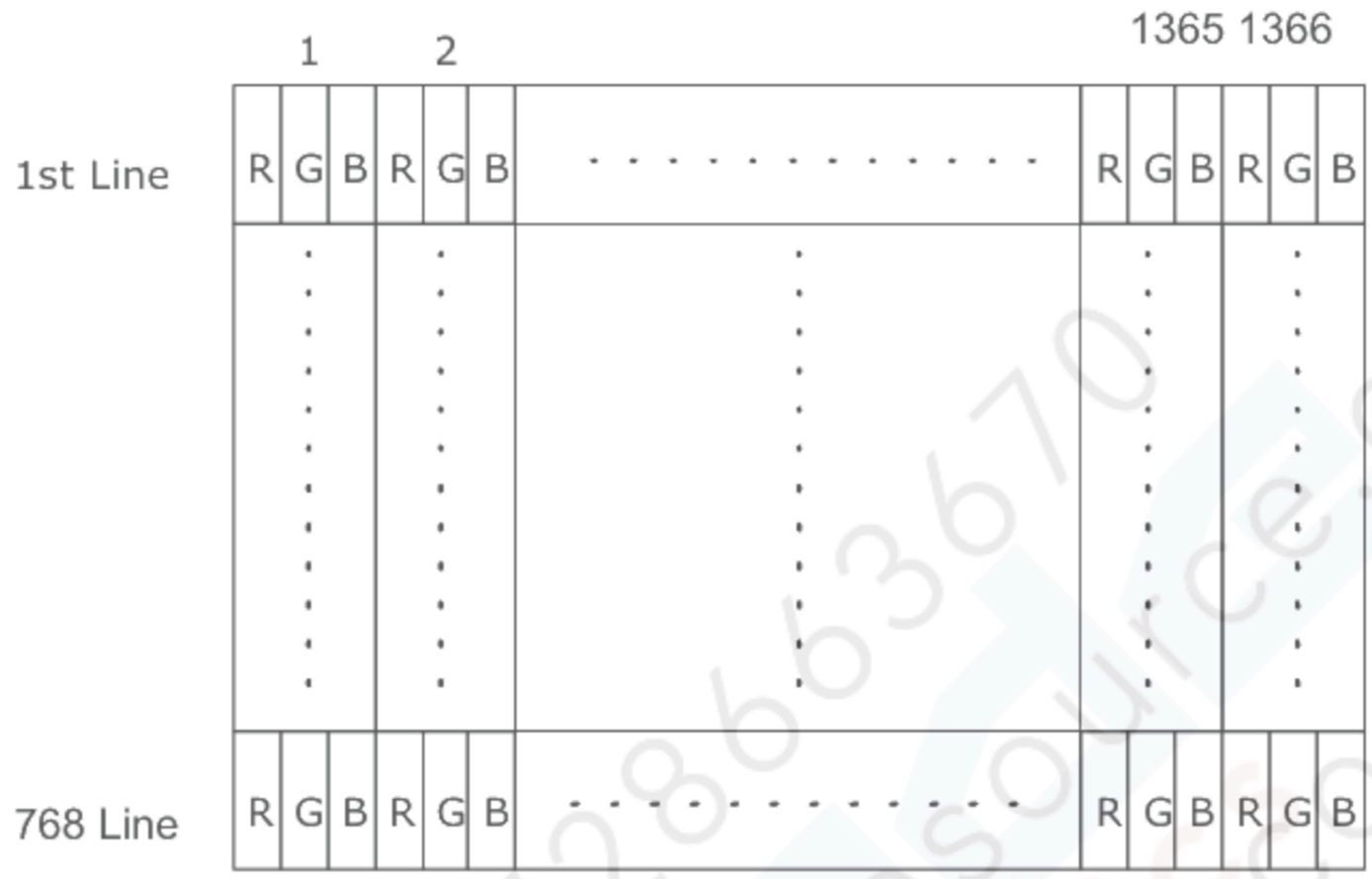

3.4.2 LVDS Data Format

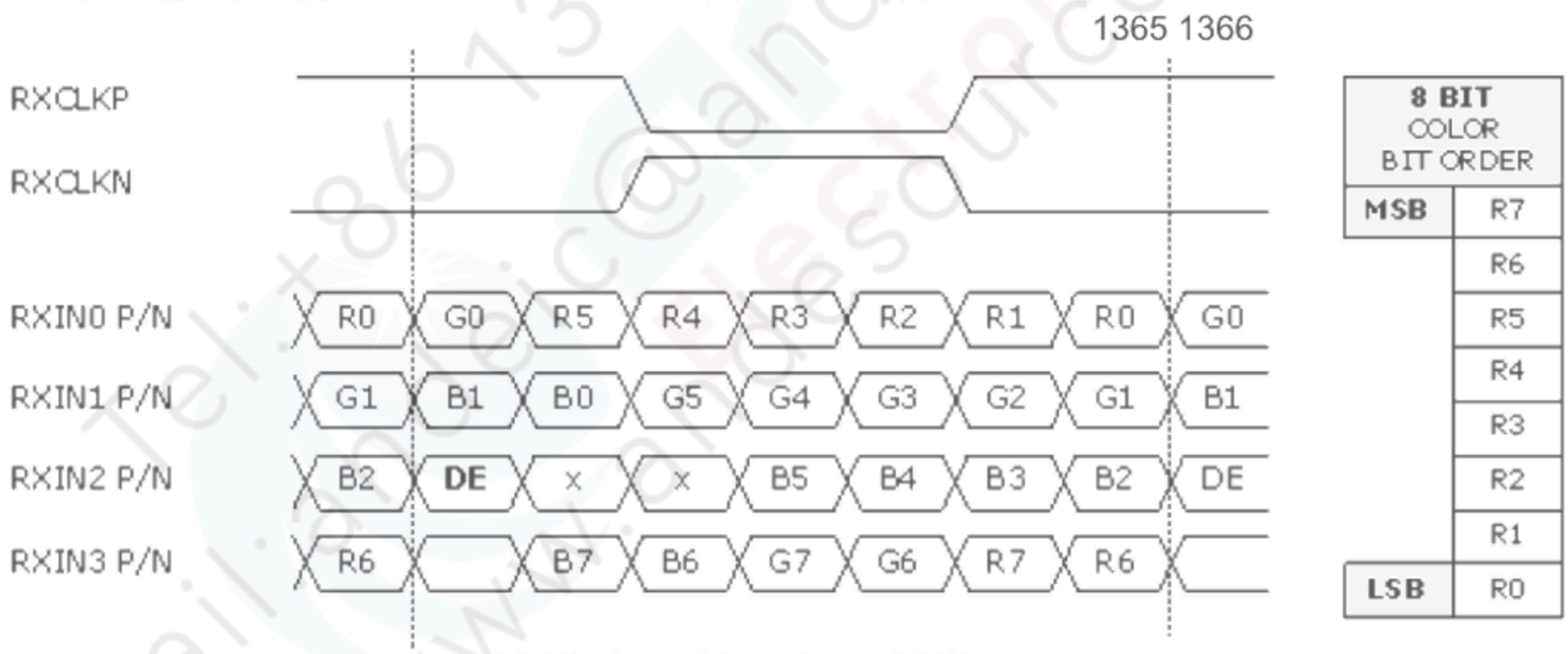

LVDS Data Mapping of NS Format

3.4.3 Color versus Input Data

The following table is for color versus input data (8bit). The higher the gray level, the brighter the color.

Color	Gray Level	Color Input Data																								Remark
		RED data (MSB:R7, LSB:R0)								GREEN data (MSB:G7, LSB:G0)								BLUE data (MSB:B7, LSB:B0)								
		R7	R6	R5	R4	R3	R2	R1	R0	G7	G6	G5	G4	G3	G2	G1	G0	B7	B6	B5	B4	B3	B2	B1	B0	
Black	-	0	0	0	0	0	0	0	0	0	0	0	0	0	0	0	0	0	0	0	0	0	0	0	0	
White	-	1	1	1	1	1	1	1	1	1	1	1	1	1	1	1	1	1	1	1	1	1	1	1	1	
Gray 127	-	0	1	1	1	1	1	1	1	0	1	1	1	1	1	1	1	0	1	1	1	1	1	1	1	
Red	L0	0	0	0	0	0	0	0	0	0	0	0	0	0	0	0	0	0	0	0	0	0	0	0	0	Black
	:	:	:	:	:	:	:	:	:	:	:	:	:	:	:	:	:	:	:	:	:	:	:	:	:	
	L255	1	1	1	1	1	1	1	1	0	0	0	0	0	0	0	0	0	0	0	0	0	0	0	0	
Green	L0	0	0	0	0	0	0	0	0	0	0	0	0	0	0	0	0	0	0	0	0	0	0	0	0	Black
	:	:	:	:	:	:	:	:	:	:	:	:	:	:	:	:	:	:	:	:	:	:	:	:	:	
	L255	0	0	0	0	0	0	0	0	1	1	1	1	1	1	1	1	0	0	0	0	0	0	0	0	
Blue	L0	0	0	0	0	0	0	0	0	0	0	0	0	0	0	0	0	0	0	0	0	0	0	0	0	Black
	:	:	:	:	:	:	:	:	:	:	:	:	:	:	:	:	:	:	:	:	:	:	:	:	:	
	L255	0	0	0	0	0	0	0	0	0	0	0	0	0	0	0	0	1	1	1	1	1	1	1	1	

3.4.4 LVDS Specification

a. DC Characteristics:

Symbol	Description	Min	Typ	Max	Units	Condition
V_{TH}	LVDS Differential Input High Threshold	-	-	+100	[mV]	V_{CM} = 1.2V
V_{TL}	LVDS Differential Input Low Threshold	-100	-	-	[mV]	V_{CM} = 1.2V
$\lvert V_{ID} \rvert$	LVDS Differential Input Voltage	100	-	600	[mV]	
V_{CM}	LVDS Common Mode Voltage	+1.0	+1.2	+1.5	[V]	V_{TH}-V_{TL} = 200mV

LVDS Signal Waveform:

Use RxOCLK- & RxOCLK+ as example.

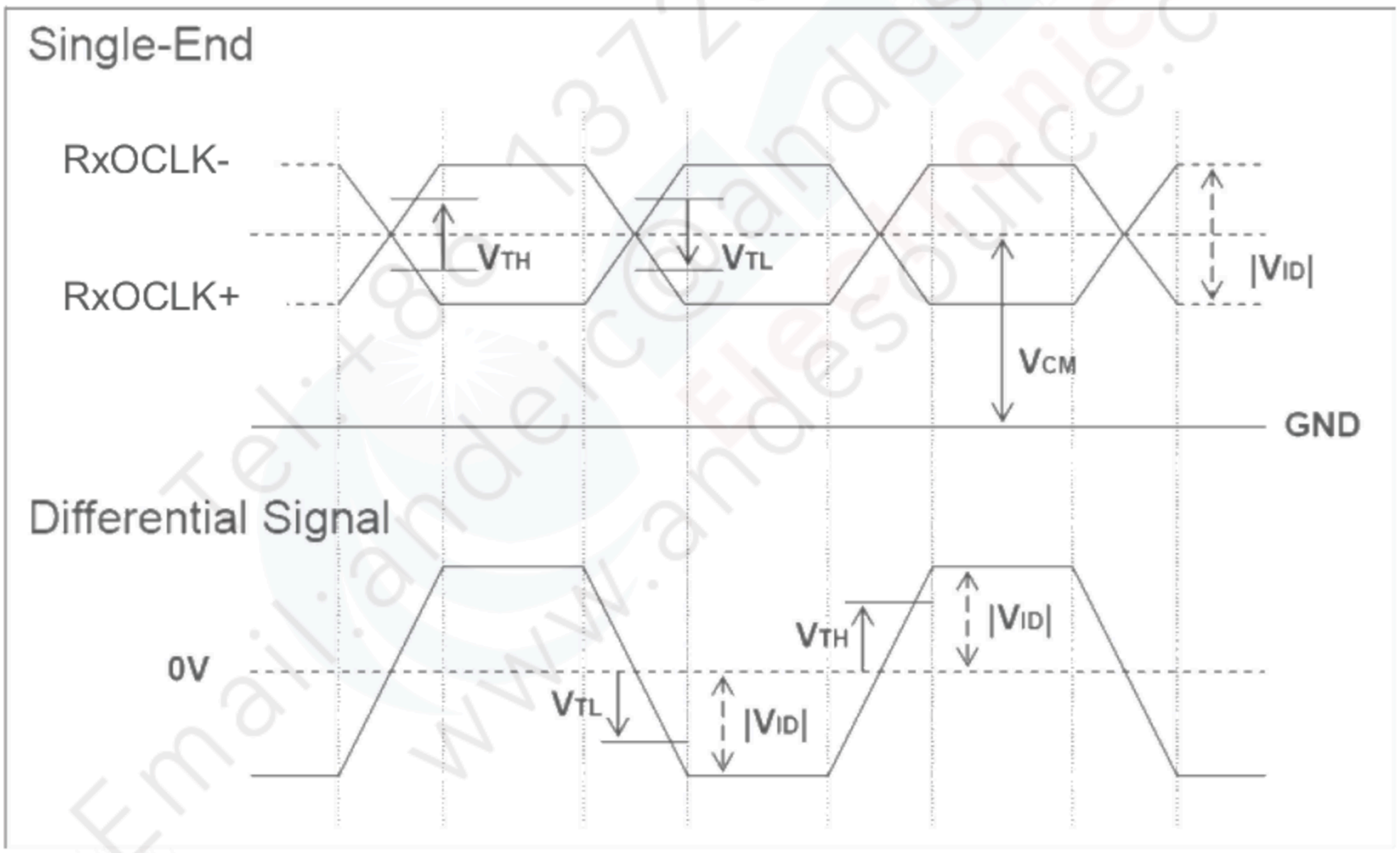

b. AC Characteristics:

Symbol	Description	Min	Max	Unit	Remark
F_{DEV}	Maximum deviation of input clock frequency during Spread Spectrum	-	± 3	%	
F_{MOD}	Maximum modulation frequency of input clock during Spread Spectrum	-	200	KHz	

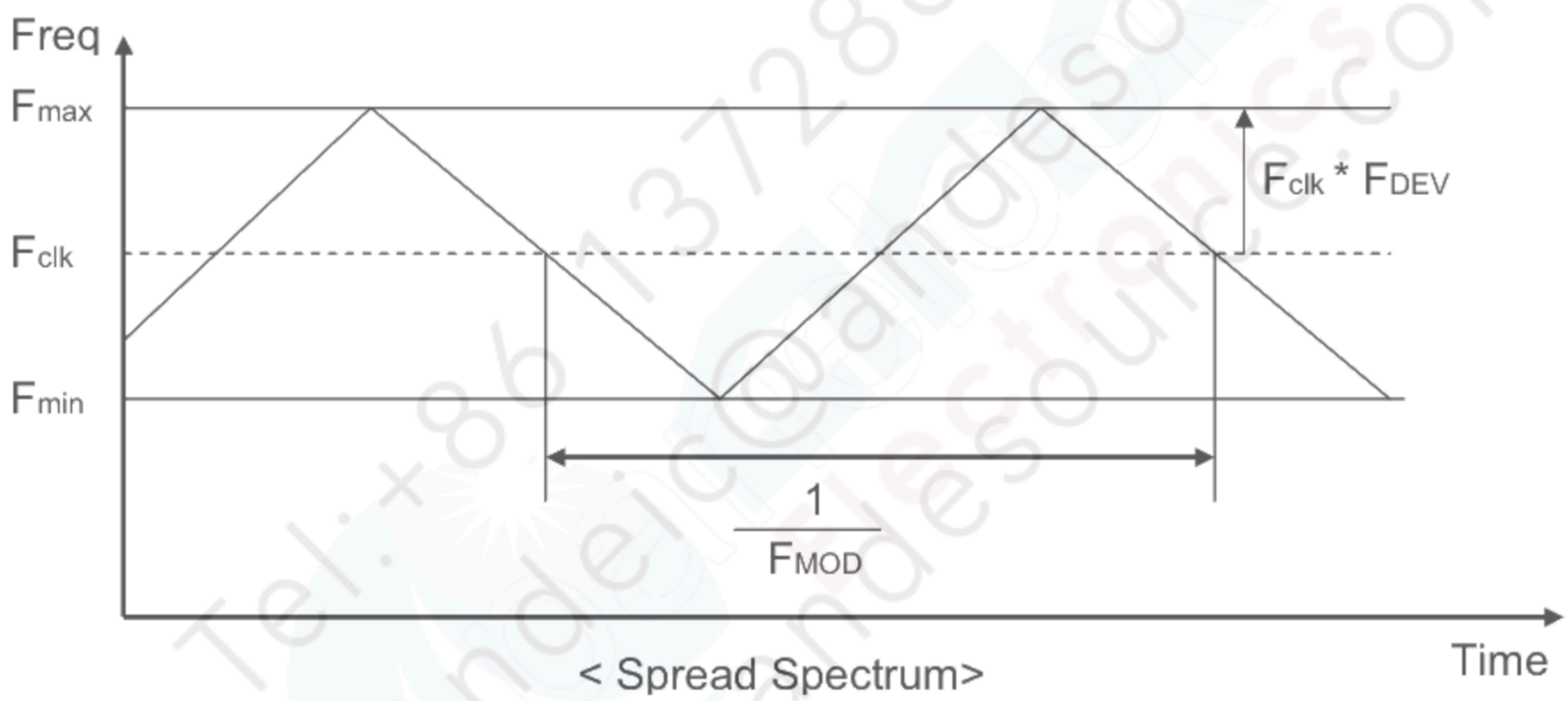

Fclk: LVDS Clock Frequency

3.4.5 Input Timing Specification

It only support DE mode, and the input timing are shown as the following table.

Symbol	Description		Min.	Typ.	Max.	Unit	Remark
Tv	Vertical Section	Period	793	808	1293	Th	
Tdisp (v)		Active	768	768	768	Th	
Tblk (v)		Blanking	25	40	525	Th	
Fv		Frequency	50	60	76	Hz	
Th	Horizontal Section	Period	1454	1606	2047	Tclk	
Tdisp (h)		Active	1366	1366	1366	Tclk	
Tblk (h)		Blanking	88	240	681	Tclk	
Fh		Frequency	39.7	48.5	64.6	KHz	***Note 3-3***
Tclk	LVDS Clock	Period	10.6	12.8	17.3	ns	1/Fclk
Fclk		Frequency	57.7	77.9	94.0	MHz	***Note 3-4***

Note 3-3: The equation is listed as following. Please don't exceed the above recommended value.

Fh (Min.) = Fclk (Min.) / Th (Min.);
Fh (Typ.) = Fclk (Typ.) / Th (Typ.);
Fh (Max.)= Fclk (Max.) / Th (Min.);

Note 3-4: The equation is listed as following. Please don't exceed the above recommended value.

Fclk (Min.) = Fv (Min.) x Th (Min.) x Tv (Min.);
Fclk (Typ.) = Fv (Typ.) x Th (Typ.) x Tv (Typ.);
Fclk (Max.) = Fv (Max.) x Th (Typ.) x Tv (Typ.);

3.4.6 Input Timing Diagram

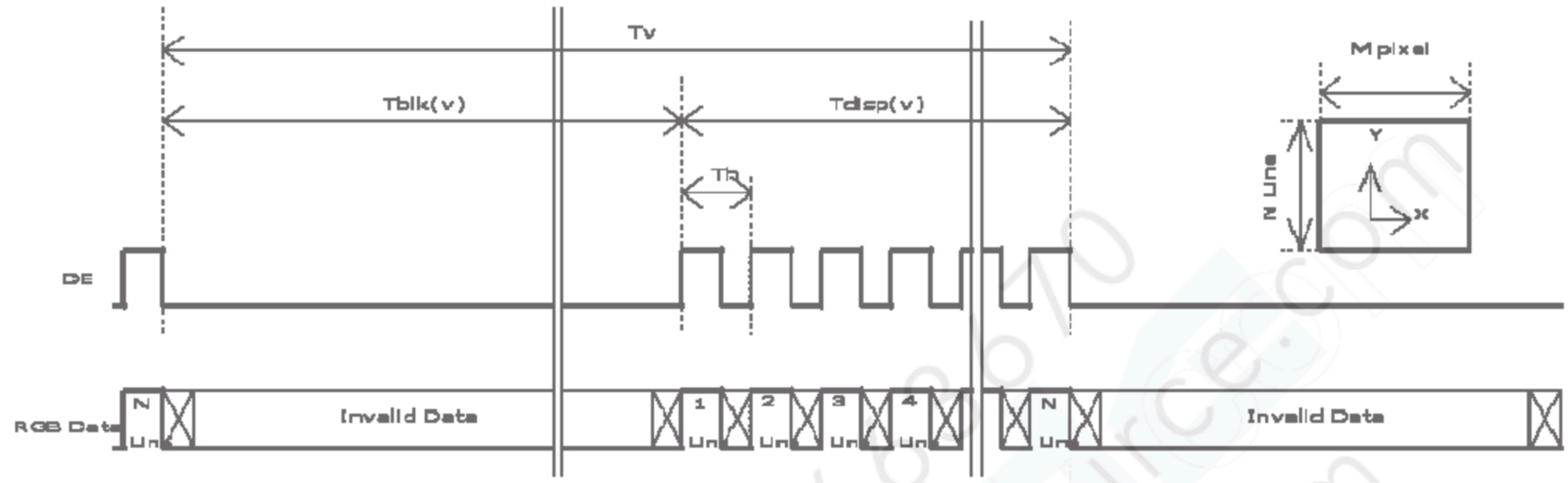

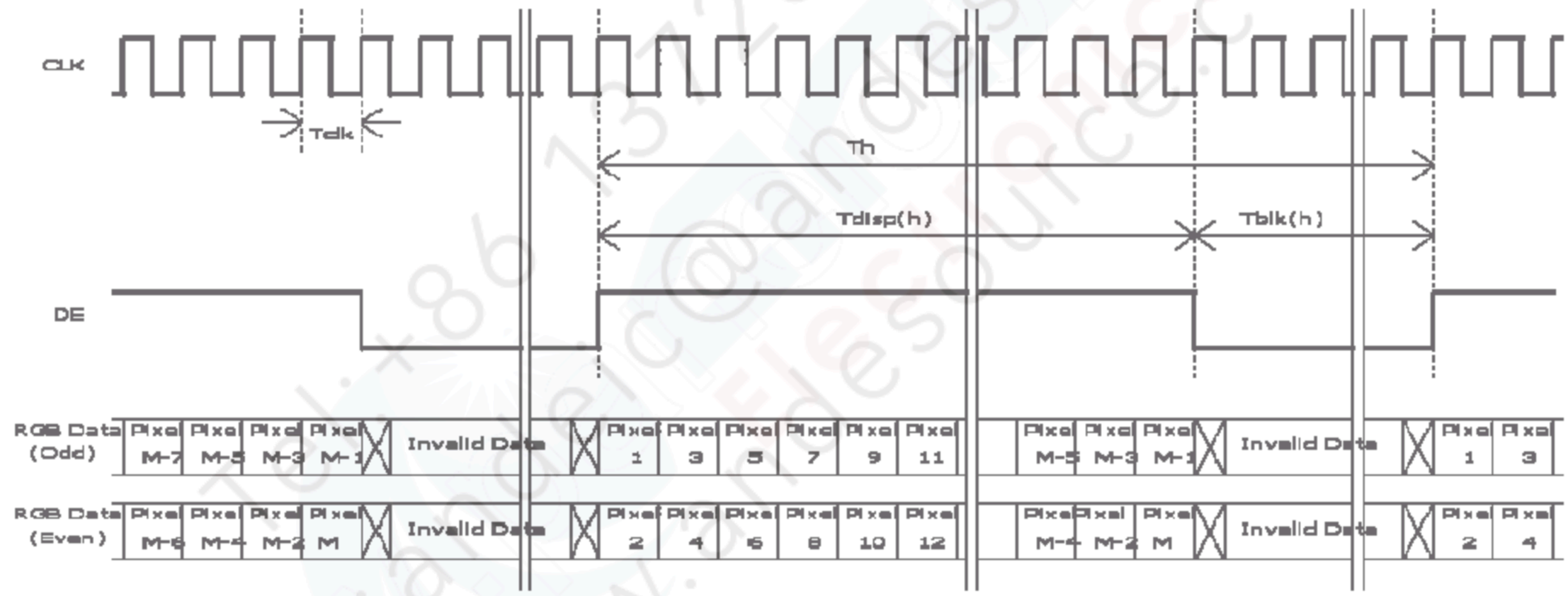

3.5 Power ON/OFF Sequence

VDD power,LVDS signal and backlight on/off sequence are as following. LVDS signals from any system shall be Hi-Z state when VDD is off.

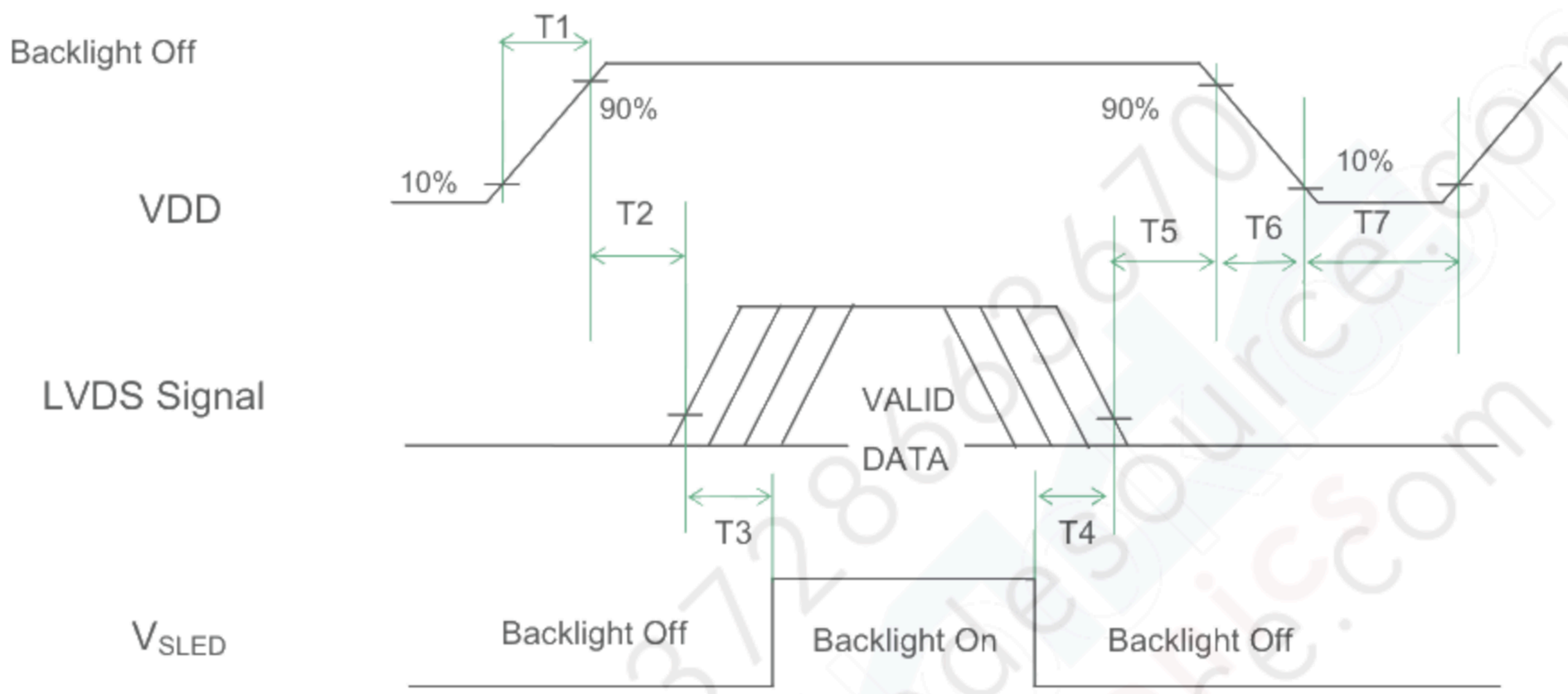

Power Sequence Timing

Symbol	Value			Unit	Remark
	Min.	Typ.	Max.		
T1	0.5	-	10	[ms]	
T2	0	-	50	[ms]	
T3	500	-	-	[ms]	
T4	100	-	-	[ms]	
T5	0		50	[ms]	***Note 3-5*** ***Note 3-6***
T6	0	-	150	[ms]	***Note 3-6***
T7	1000	-	-	[ms]	

Note 3-5 : Recommend setting T5 = 0ms to avoid electronic noise when VDD is off.

Note 3-6 : During T5 and T6 period , please keep the level of input LVDS signals with Hi-Z state.

4 Backlight Unit

4.1 Block Diagram

The following shows the block diagram of the 19.5 inch Backlight Unit. And it includes 32 pcs LED in the LED light bar. (4 strings and 8 pcs LED of one string).

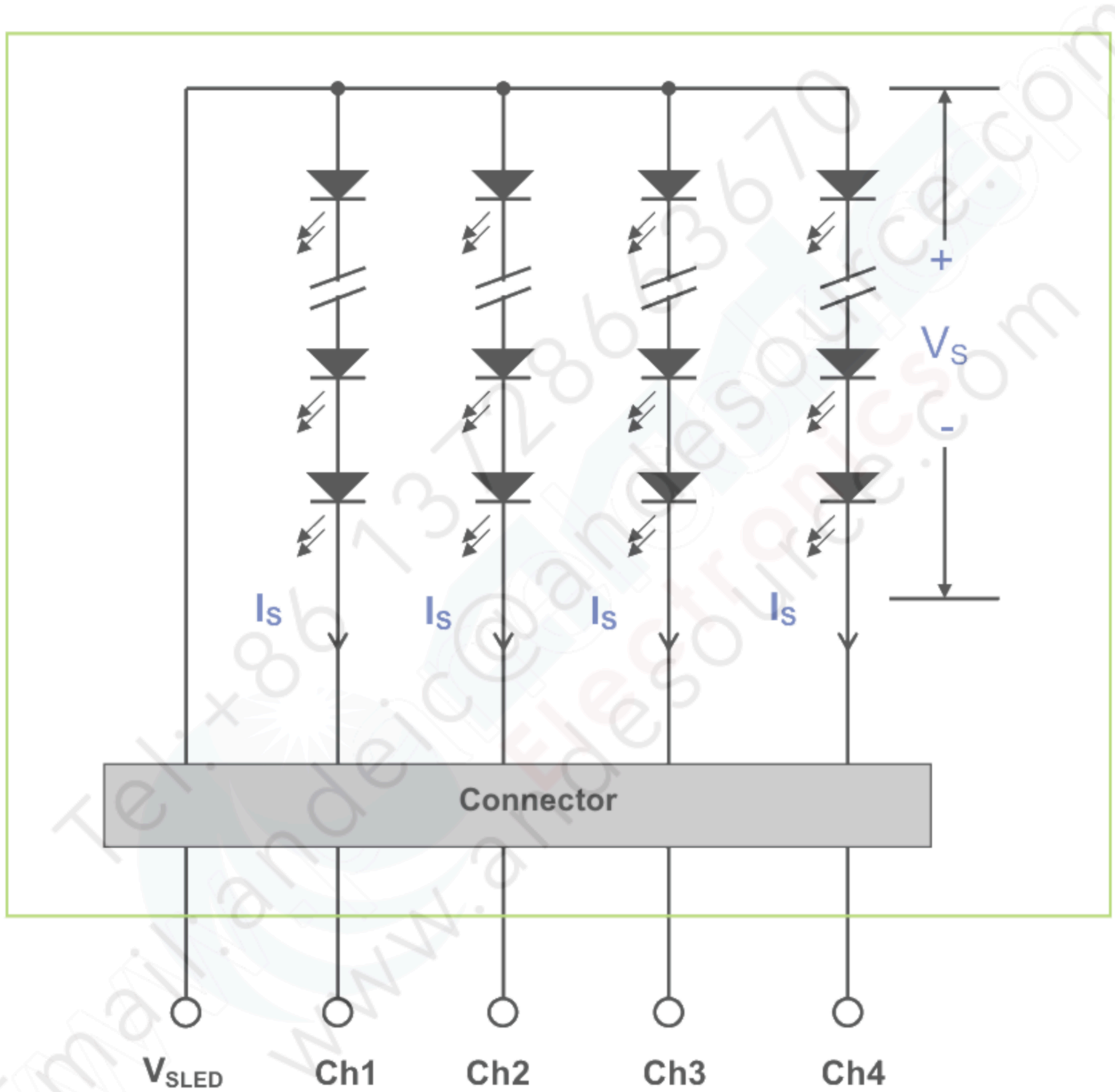

4.2 Interface Connection

4.2.1 Connector Type

Backlight Connector	Manufacturer	ENTERY
	Part Number	3707K-S06N-21R
Mating Connector	Manufacturer	ENTERY
	Part Number	H112K-P06N-13B (Locking type)

Backlight Connector dimension:

$H \times V \times D = 13.9 \times 3.00 \times 4.25, Pitch = 1.0(unit = mm)$

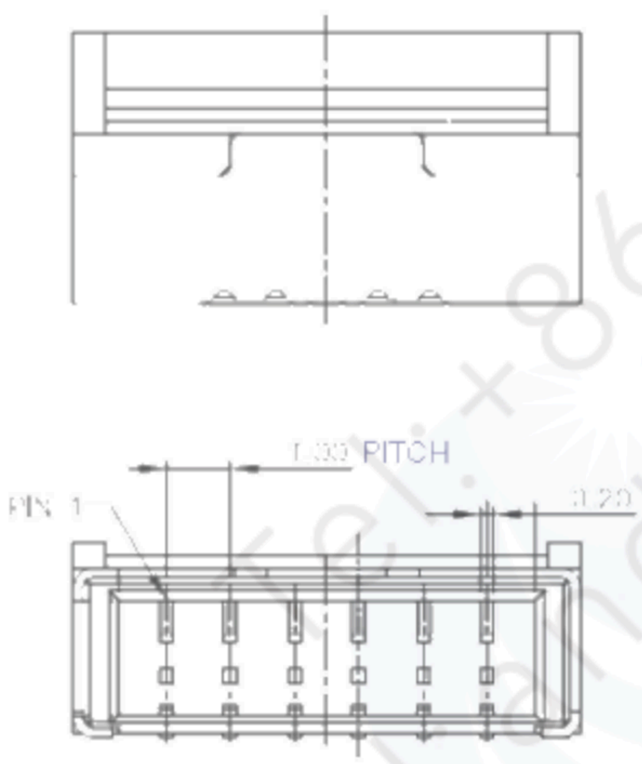

Mating Connector dimension:

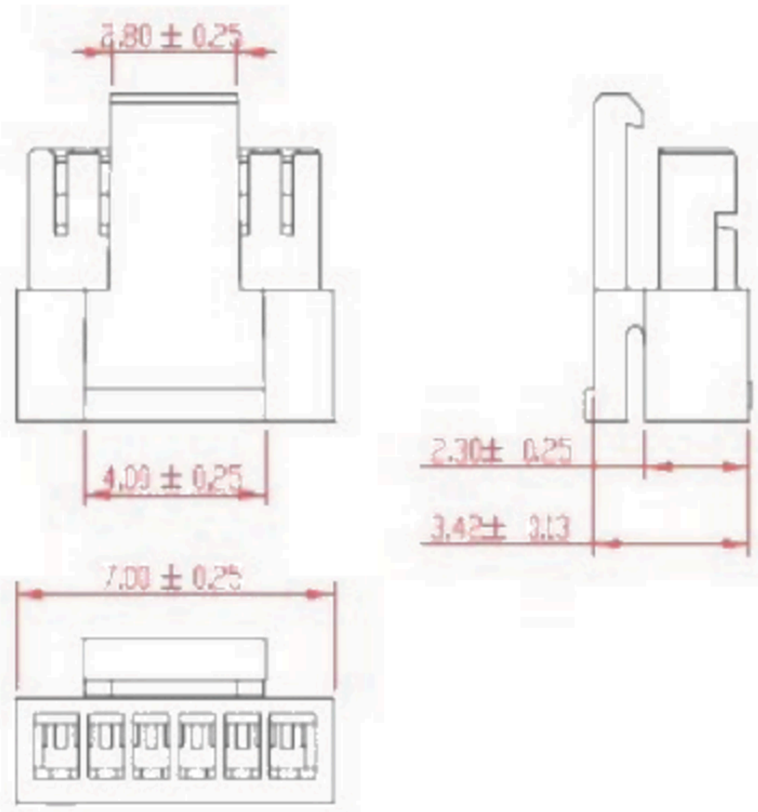

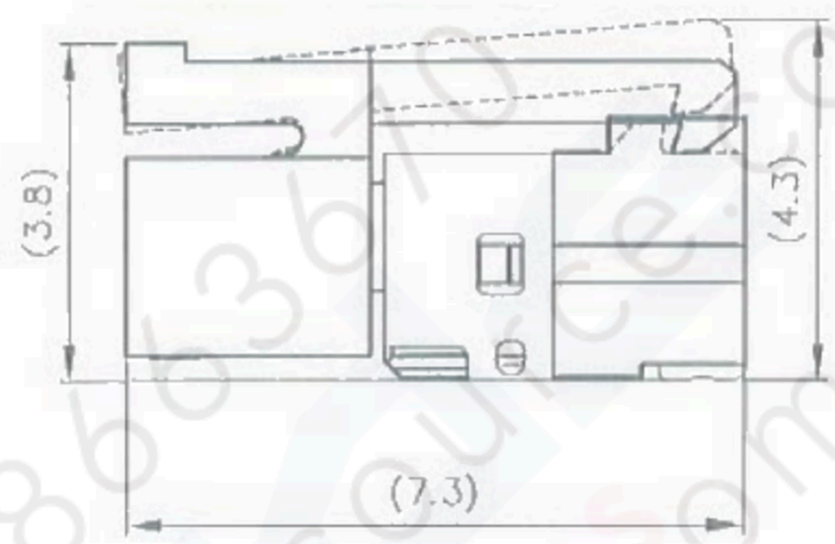

4.2.2 Connector Pin Assignment

Pin#	Symbol	Description	Remark
1	Ch1	LED Current Feedback Terminal (Channel 1)	
2	Ch2	LED Current Feedback Terminal (Channel 2)	
3	V_{SLED}	LED Power Supply Voltage Input Terminal	
4	V_{SLED}	LED Power Supply Voltage Input Terminal	
5	Ch3	LED Current Feedback Terminal (Channel 3)	
6	Ch4	LED Current Feedback Terminal (Channel 4)	

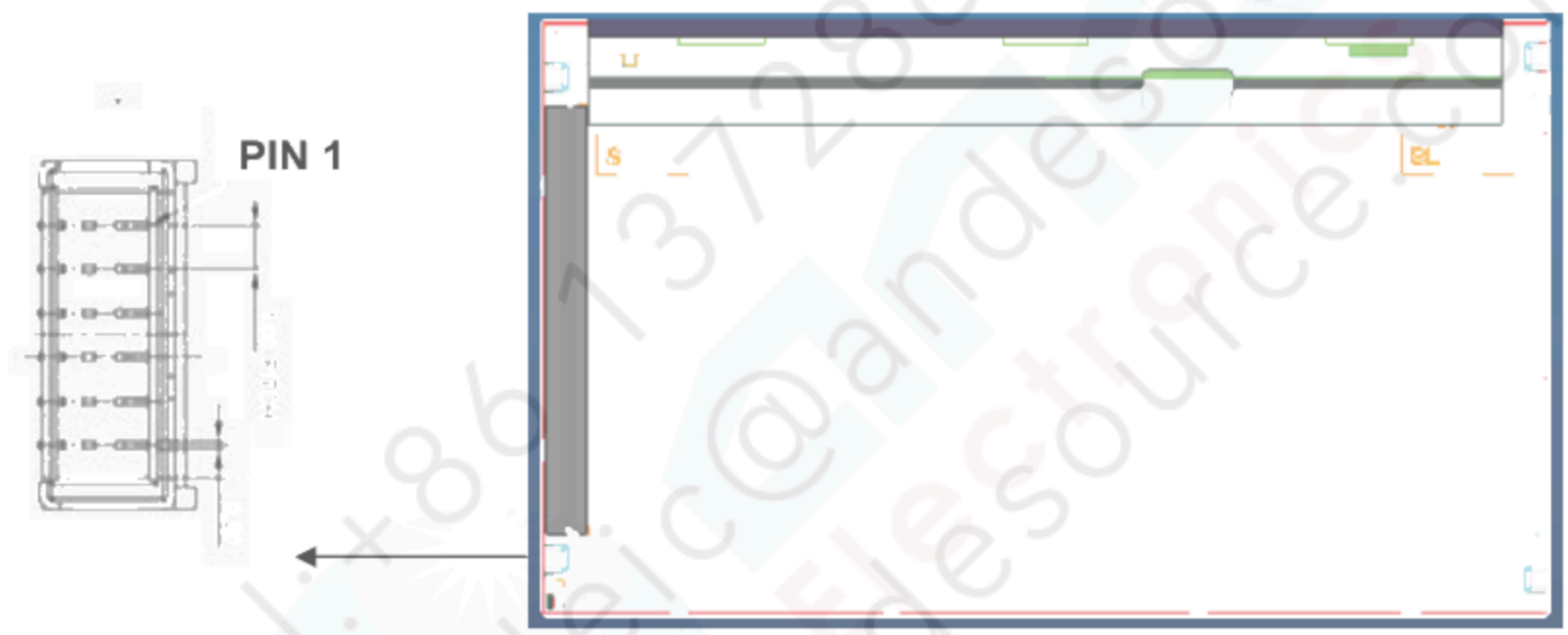

4.3 Electrical Characteristics

4.3.1 Absolute Maximum Rating

Permanent damage may occur if exceeding the following maximum rating.

(Ta=25℃)

Symbol	Description	Min	Max	Unit	Remark
Is	LED String Current	0	90	[mA]	100% duty ratio
			150	[mA]	*Duty ratio ≦ 10%* *Pulse time=10 ms*

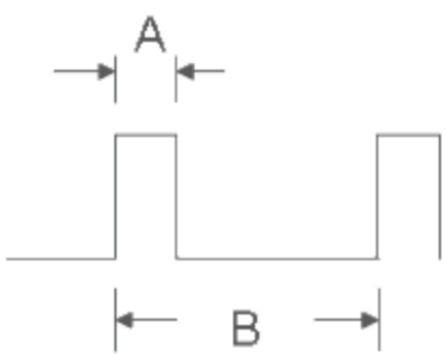

Duty ratio= (A / B) X 100% ; (A: Pulse time, B: Period)

4.3.2 Recommended Operating Condition

(Ta=25℃)

Symbol	Description	Min.	Typ.	Max.	Unit	Remark
Is	LED String Current	-	60	66	[mA]	100% duty ratio of LED chip
Vs	LED String Voltage	22.4	24.8	27.2	[Volt]	Is=60mA @ 100% duty ratio; ***Note 4-1, Note 4-5***
ΔVs	Maximum Vs Voltage Deviation of light bar	-	-	1.6	[Volt]	Is=60mA @ 100% duty ratio; ***Note 4-2***
P_{BLU}	LED Light Bar Power Consumption	-	5.95	6.5	[Watt]	***Note 4-3***
LT_{LED}	LED Life Time	30,000	-	-	[Hour]	***Note 4-4***
OVP	Over Voltage Protection in system board	110% Vsmax	-	-	[Volt]	***Note 4-5***

Note 4-1: Vs (Typ.) = V_F (Typ.) X LED No. (one string);

a. V_F: LED chip forward voltage, V_F (Min.)=2.8V, V_F(Typ.)=3.1V, V_F(Max.)=3.4V

b. The same euqation to calculate Vs(Min.) & Vs (Max.) for respective V_F (Min.) & V_F(Max.);

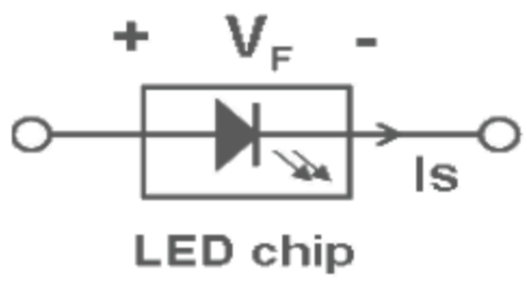

Note 4-2: ΔVs (Max.) = ΔV_F X LED No. (one string);

a. ΔV_F: LED chip forward voltage deviation; (0.2 V , each Bin of LED V_F)

Note 4-3: P_{BLU} (Typ.) = Vs (Typ.) X Is (Typ.) X 4 ; (4 is total String No. of LED Light bar)

P_{BLU} (Max.) = Vs (Max.) X Is (Typ.) X 4 ;

Note 4-4: Definition of life time:

a. Brightness of LED becomes to 50% of its original value

b. Test condition: Is = 60mA and 25℃ (Room Temperature)

Note 4-5: Recommendation for LED driver power design:

Due to there are electrical property deviation in LED & monitor set system component after long time operation. AUO strongly recommend the design value of LED driver board OVP (over voltage protection) should be 10% higher than max. value of LED string voltage (Vs) at least.

Note 4-6: AUO strongly recommend "Analog Dimming" method for backlight brightness control for Wavy Noise Free. Otherwise, recommend that Dimming Control Signal (PWM Signal) should be synchronized with Frame Frequency.

5 Reliability Test

AUO reliability test items are listed as following table. (*Bare Panel only*)

Items	Condition	Remark
Temperature Humidity Bias (THB)	Ta= 50℃, 80%RH, 300hours	
High Temperature Operation (HTO)	Ta= 50℃, 50%RH, 300hours	
Low Temperature Operation (LTO)	Ta= 0℃, 300hours	
High Temperature Storage (HTS)	Ta= 60℃, 300hours	
Low Temperature Storage (LTS)	Ta= -20℃, 300hours	
Vibration Test (Non-operation)	Acceleration: 1.5 Grms Wave: Random Frequency: 10 - 200 Hz Sweep: 30 Minutes each Axis (X, Y, Z)	
Shock Test (Non-operation)	Acceleration: 50 G Wave: Half-sine Active Time: 20 ms Direction: ±X, ±Y, ±Z (one time for each Axis)	
Thermal Shock Test (TST)	-20℃/30min, 60℃/30min, 100 cycles	***Note 5-1***
On/Off Test	On/10sec, Off/10sec, 30,000 cycles	
ESD (Electro Static Discharge)	Contact Discharge: ± 15KV, 150pF(330Ω) 1sec, 8 points, 25 times/ point.	***Note 5-2***
	Air Discharge: ± 15KV, 150pF(330Ω) 1sec 8 points, 25 times/ point.	
Altitude Test	Operation:18,000 ft Non-Operation:40,000 ft	

Note 5-1: a. A cycle of rapid temperature change consists of varying the temperature from -20℃ to 60℃, and back again. Power is not applied during the test.
b. After finish temperature cycling, the unit is placed in normal room ambient for at least 4 hours before power on.

Note 5-2: EN61000-4-2, ESD class B: Certain performance degradation allowed
No data lost
Self-recoverable
No hardware failures.

6 Shipping Label

The label is on the panel as shown below:

Note 6-1: For Pb Free products, AUO will add Pb for identification.

Note 6-2: For RoHS compatible products, AUO will add RoHS for identification.

Note 6-3: For China RoHS compatible products, AUO will add 15 for identification.

Note 6-4: The Green Mark will be presented only when the green documents have been ready by AUO Internal Green Team.

7 Mechanical Characteristics

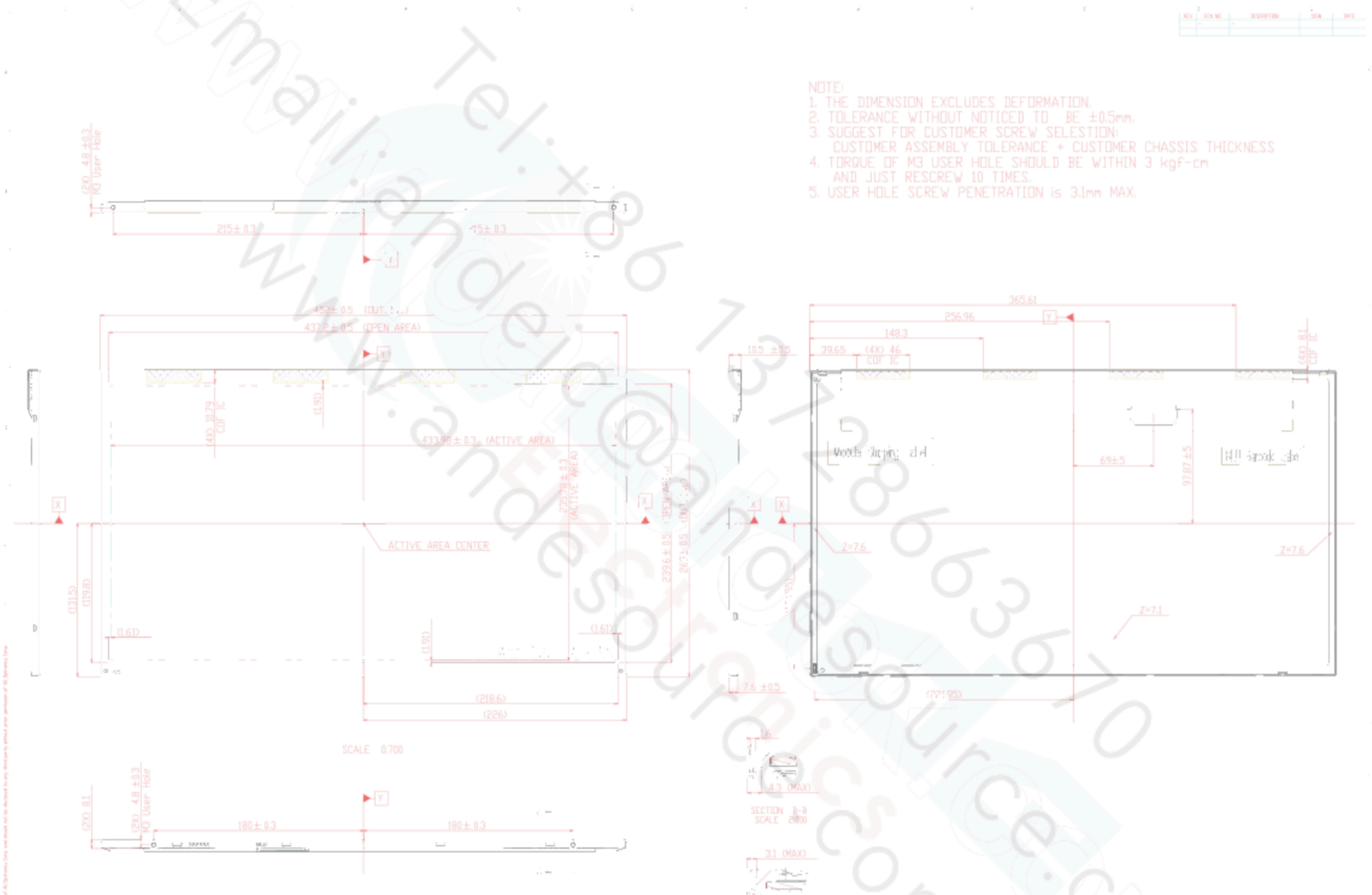

(1) Avoid touching COF position when doing mechanical design
(2) The user hole depth of the light bar side is different from the other side

8 Packing Specification

8.1 Packing Flow

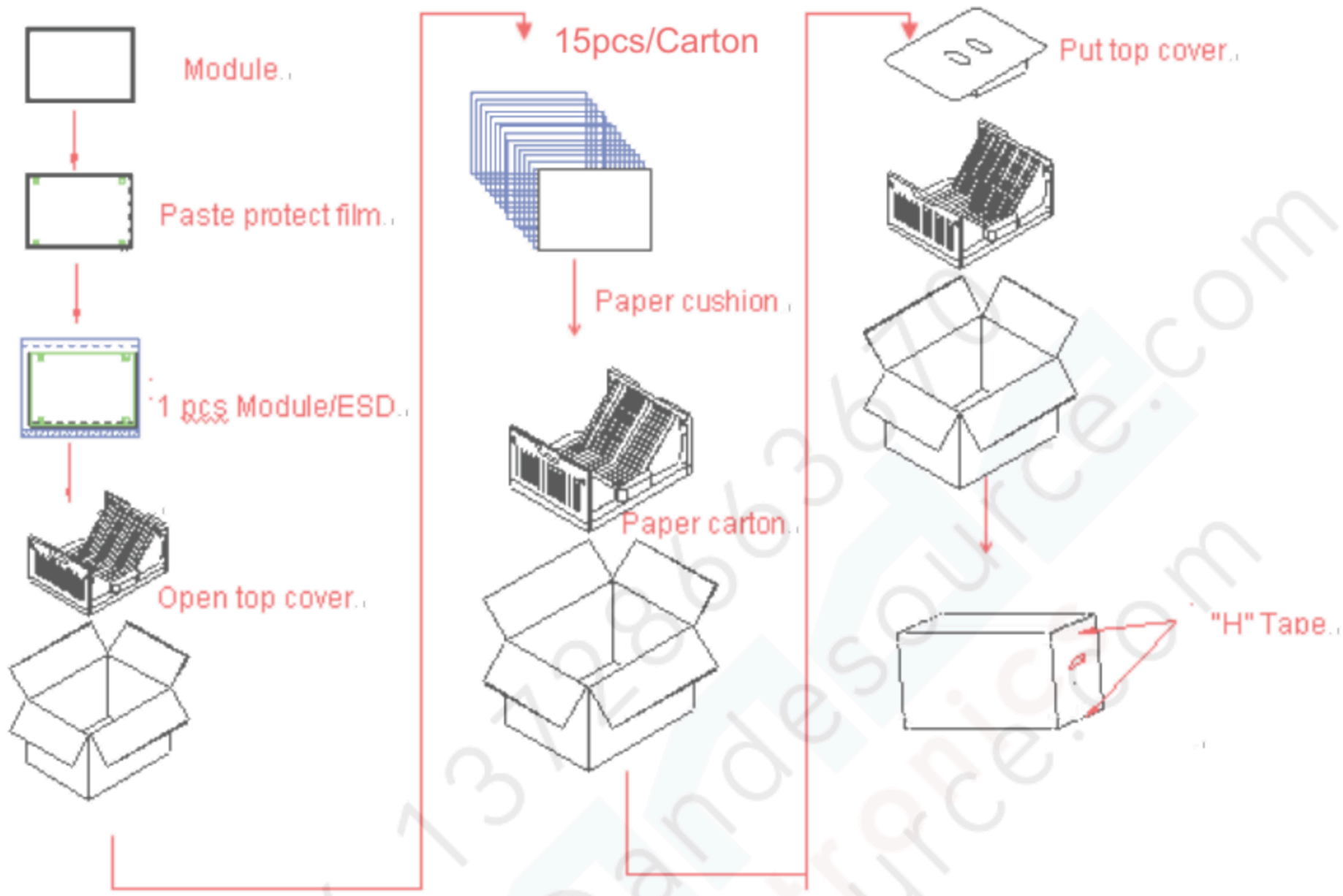

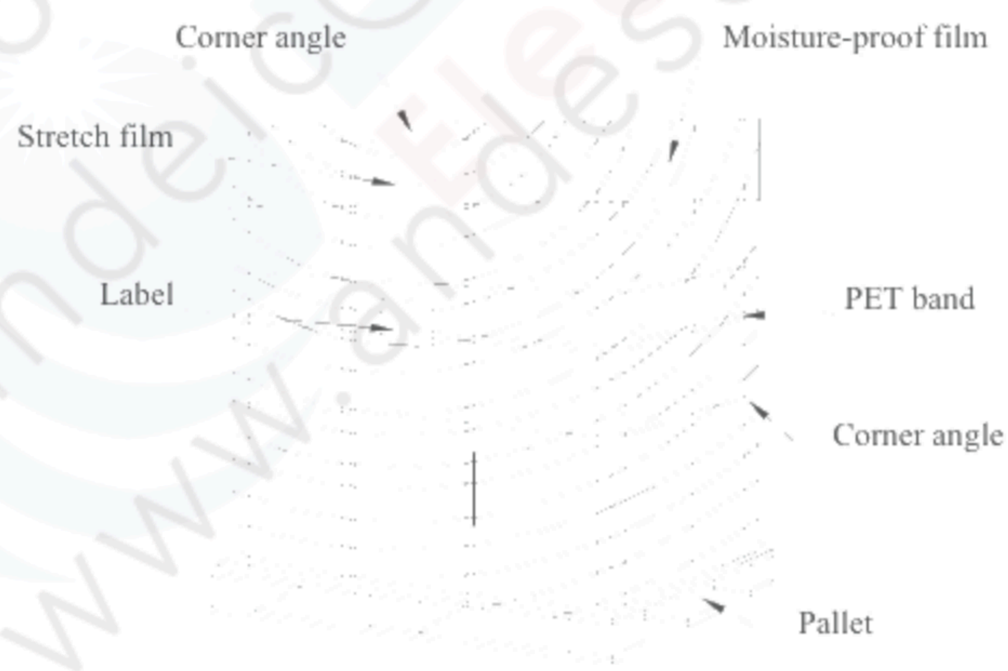

8.2 Pallet and shipment information

Item	Specification			Remark
	Q'ty	Dimension	Weight(kg)	
Panel	1	452.0(H)mmx263(V)mmx10.5(D)mm	1.38 Kg	
Cushion	1	-	2 Kg	
Box	1	526(L)mm x 299(W)mm x 335(H)mm	0.7Kg	without Panel & cushion
Packing Box	15 pcs/Box	526(L)mm x 299(W)mm x 335(H)mm	24.15Kg	with panel & cushion
Pallet	1	1150(L)mm x 910(W)mm x 138(H)mm	15Kg	
Pallet after Packing	18boxes/ pallet	1150(L)mm x 910(W)mm x 1143(H)mm	449.7Kg	