SPECIFICATION

[◉] Preliminary Specification
[ ] Final Specification

Description **10.4” 1024xRGBx768 TFT-LCD Module**

Part Number **P1040XGF1MB01**

Customer	Mitsubishi	Industrial Product Dept, PDBU Tianma Microelectronics Co., Ltd.	
Signatures	Date	Approved By	Date
		Hongyu Shen	2022-4-8
		Reviewed By Guanchen Zhu	2022-4-8
		Prepared By Jingdan Huang	2022-3-24

Comments:

* This cover page is for your Comments and Signatures back to TIANMA.

REVISION HISTORY

Rev	Date	Revision Items	Editor
1.0	2022/3/24	Preliminary spec	Jingdan Huang
1.1	2022/4/22	6.2 LVDS mode AC electrical characteristics 9. Mechanical Drawing update	Jingdan Huang

CONTENTS

1. Summary

1.1 General Description

This is a 10.4 inch a-Si TFT-LCD module with Normal- Black technology. It is composed of a TFT-LCD panel, a driver circuit, PCB, and a LED backlight unit.

1.2 Features

- Ultra-wide viewing angle
- Interface: 1port LVDS, 6/8bit selectable
- LED driver integrated
- Surface treatment: Anti-Glare

- Acquisition product for UL62368-1/CSA C22.2 No.62368-1-03 (File number: TBD)
- Compliant with the European RoHS Directive (2011/65/EU) and Delegated Directive (2015/863/EU, Amending Annex II of 2011/65/EU)

2. General Specifications

Feature		Spec	Unit
Display Spec	Size	10.4 inches	
	Resolution	1024(RGB)x768	
	Pixel Pitch	0.2055x0.2055	mm
	TFT Active Area	210.432×157.824	mm
	Technology Type	a-Si	
	Pixel Configuration	R.G.B Vertical Stripe	
	Display Mode	SFT, Normally Black	
	Surface Treatment	Anti-Glare	
	Viewing Direction	ALL	
Mechanical Characteristics	LCM (W x H x D)	230.00x175.80x5.70	mm
	Weight	430	g
Optical Characteristics	Luminance(typ)	500	cd/m^2
	Contrast Ratio(typ)	1200:1	
	NTSC(typ)	50	%
	Viewing Angle(typ)	85/85/85/85	degree
Electrical Characteristics	Interface	1port LVDS, 6/8bit selectable	
	Color Depth	16.7M/262K	color
	Power Consumption(typ)	LCD:1419; Backlight:3960	mW

Table 2.1 General TFT Specifications

3. Input / Output Terminals

3.1 CN1 Pin assignment (LCD Interface)

Connector Information	
LCD Module connector	DF19K-20P-1H
Matching connector	DF19-20S-1C

Table 3.1.1 Connector information

No	Symbol	I/O	Description	Comment
1	VDD	P	Power Voltage for digital circuit	
2	VDD	P	Power Voltage for digital circuit	
3	GND	P	Ground	
4	DPS	I	L: Forward Scan(Default) H: Reverse Scan	
5	RxCLKIN-	I	- LVDS differential clock input	
6	RxCLKIN+	I	+ LVDS differential clock input	
7	GND	P	Ground	
8	RxIN0-	I	- LVDS differential data input (0)	
9	RxIN0+	I	+ LVDS differential data input (0)	
10	GND	P	Ground	
11	RxIN1-	I	- LVDS differential data input (1)	
12	RxIN1+	I	+ LVDS differential data input (1)	
13	GND	P	Ground	
14	RxIN2-	I	- LVDS differential data input (2)	
15	RxIN2+	I	+ LVDS differential data input (2)	
16	GND	P	Ground	
17	RxIN3-	I	- LVDS differential data input (3)	
18	RxIN3+	I	+ LVDS differential data input (3)	
19	AG Mode	I	Normal operation/BIST pattern select H: BIST; L: Normal(Default)	
20	HSD	I	6bit/8bit mode select H: 6bit; L: 8bit(Default)	

Table 3.1.2 Pin Assignment for LCD Interface

Note1: I/O definition: I---Input, P---Power/Ground

Note2: **LVDS 6-bit data mapping when HSD=H as follows:**

6-bit LVDS input (HSD = "H")

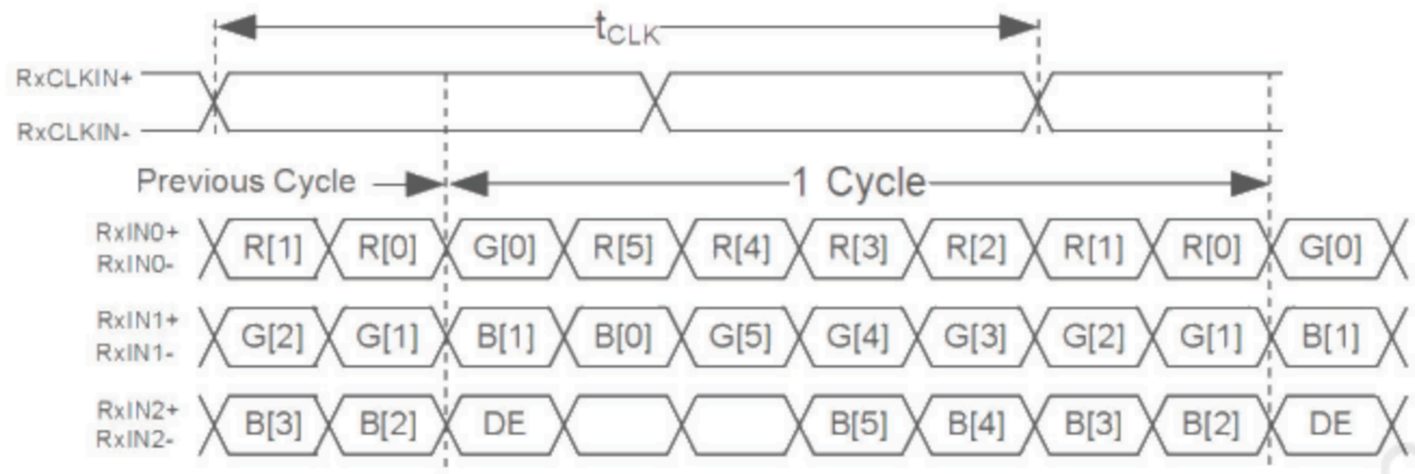

Figure 3.1.1 Input signal data mapping

LVDS 8-bit data mapping when HSD =L as follows:

8-bit LVDS input (HSD = "L")

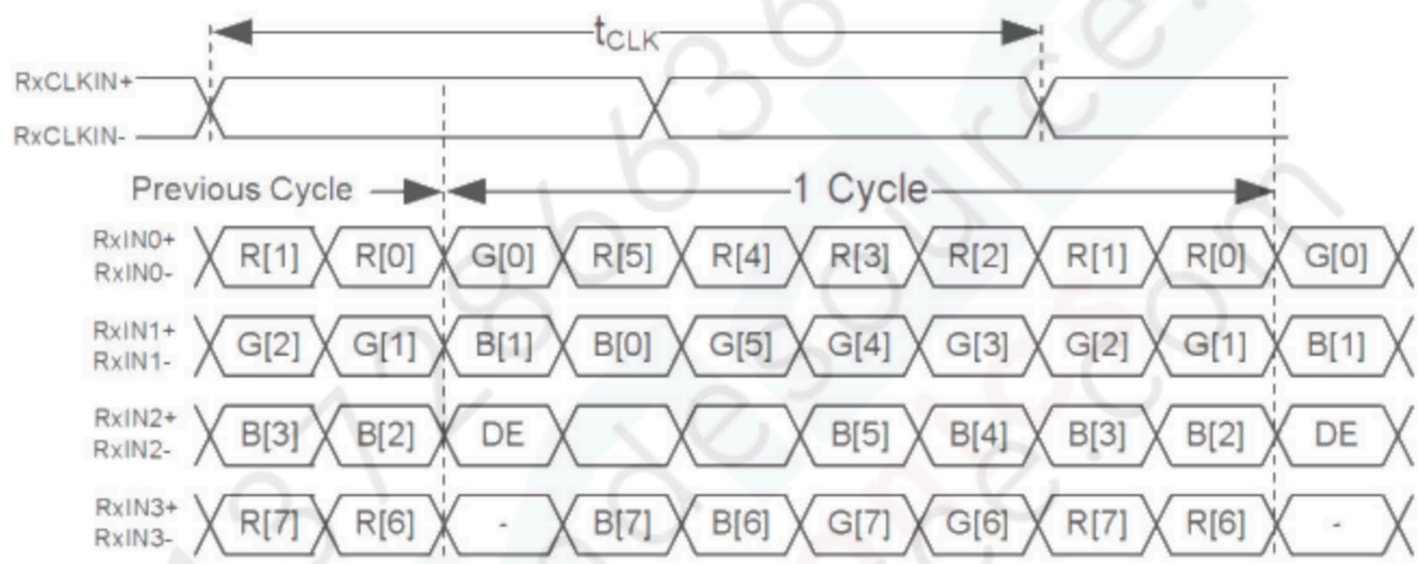

Figure 3.1.2 Input signal data mapping

Note3: DPS: Scan direction setting

It is recommended that the pins give the level voltage directly, without other circuits, such as pull-up resistors. If other IO control such as FPGA is used, the drive current should be greater than 20mA.

The circuit design is as follows. For the circuit to work properly, the input voltage of DPS should meet the following requirements.

High: DPS ≧ 2.6V;

Low: DPS ≦ 0.5V.

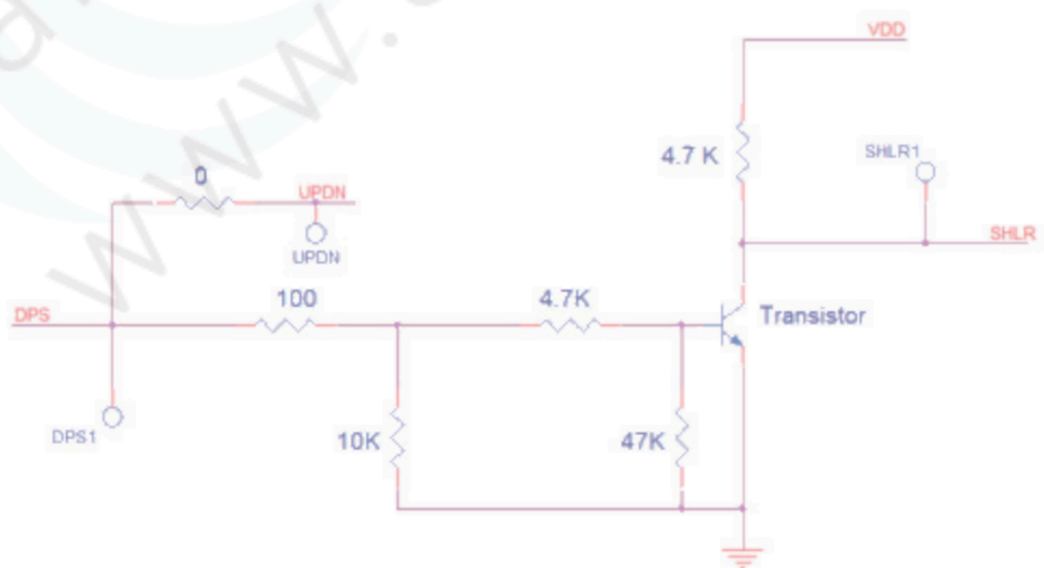

Figure 3.1.3 DPS Schematic

DPS	SHLR (Horizontal Scan direction)	UPDN (Vertical Scan direction)
High	Low (Right to left)	High (Down to up)
Low	High (Left to right)	Low (Up to down)

DPS：L　　DPS：H

3.2 CN2 Pin assignment (Back Light)

Connector Information	
LCD Module connector	3808K-F05N-03R
Matching connector	H208K-D05N-22B +M002N-F07N-22R

Table 3.2.1 Connector information

No	Symbol	I/O	Description	Remark
1	VCC	P	Power Voltage for LED driver IC-12V	
2	GND	P	Ground	
3	Dimming	I	Dimming Control Input (Default: Hi-Z)	
4	EN	I	Enable (Active High) for LED driver IC (Default: EN=L)	
5	NC	-	No connection	

Table 3.2.2 Pin Assignment for Back Light Interface

Note1: I/O definition: I---Input, O---Output, P---Power/Ground, N---No connection

4. Absolute Maximum Ratings

Item	Symbol	MIN	MAX	Unit	Remark
Power Voltage for LCD	VDD	-0.5	5.0	V	Note1
Power for LED driving circuit	VCC	-0.3	15.0	V	
Input voltage for LCD	VIN	-0.5	5.0	V	
Input voltage for backlight	Vt	-0.3	5.0	V	Note 2;Note 3
Operating Temperature	TOPR	-20	+70	℃	Note 4
Storage Temperature	TSTG	-30	+80	℃	
Relative Humidity Note2	RH	--	≤95	%	Ta≤40℃
		--	≤85	%	40℃＜Ta≤50℃
		--	≤55	%	50℃＜Ta≤60℃
		--	≤36	%	60℃＜Ta≤70℃
Absolute Humidity	AH	--	≤70	g/m³	Ta＞70℃

Table 4.1 Absolute Maximum Ratings

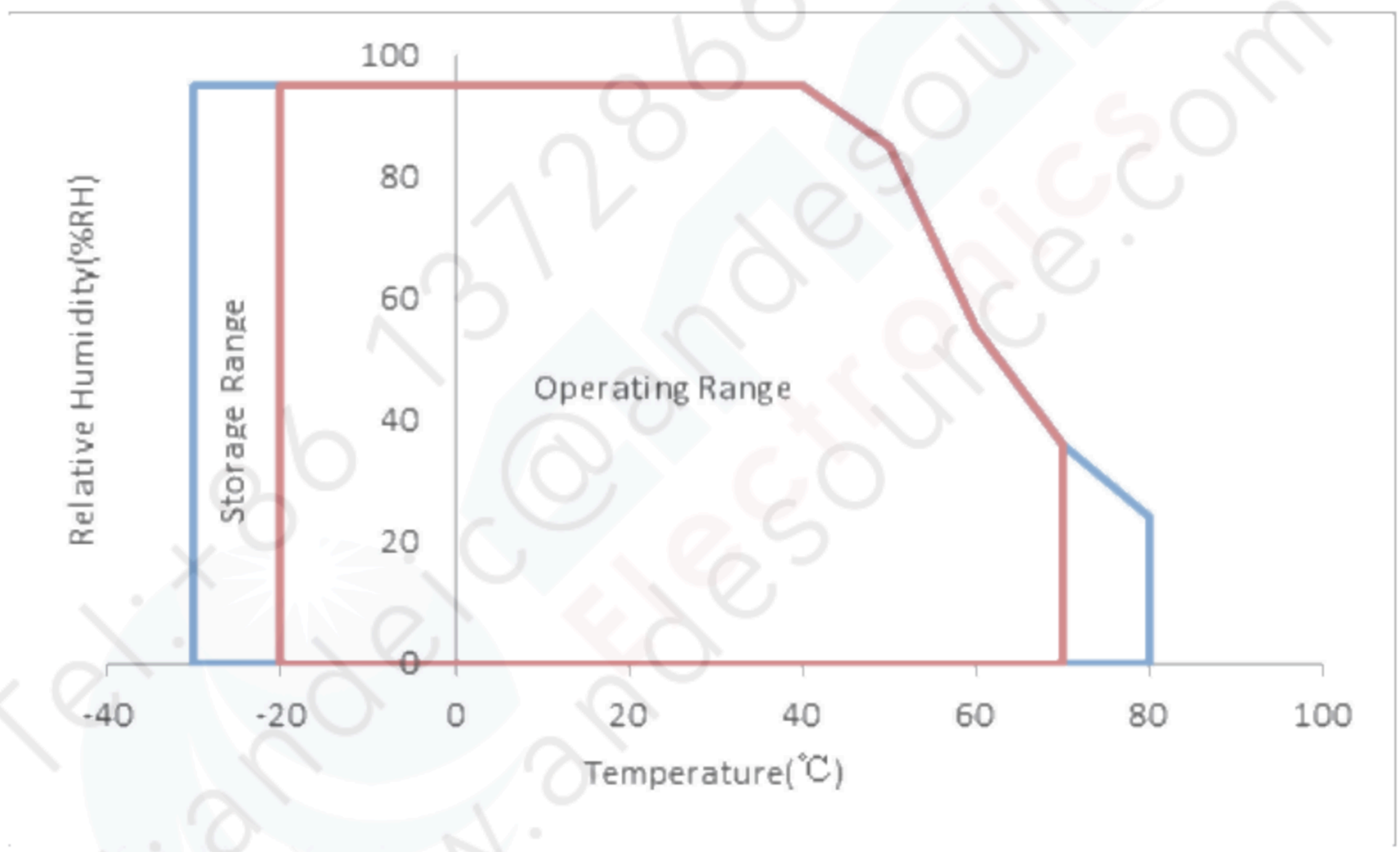

Table 4.2 Absolute Maximum Ratings chart

Note1: V_{IN} represents RxIN0±,RxIN1±,RxIN2±,RxIN3±,RxCLKIN±,DPS,AGMode,HSD.
Note2: V_t represents EN and Dimming.
Note3: Should keep the maximum value of EN and Dimming are equal.
Note4: Ta means the ambient temperature.
It is necessary to limit the relative humidity to the specified temperature range.
Condensation on the module is not allowed.

5. Electrical Characteristics

5.1 DC Characteristics for Panel Driving

GND=0V, Ta=25℃

Item		Symbol	MIN	TYP	MAX	Unit	Remark
Digital supply Voltage		VDD	3.0	3.3	3.6	V	Note1
Input Signal Voltage	Low Level	V_{IL}	0	-	0.3xVDD	V	Note2
	High Level	V_{IH}	0.7xVDD	-	VDD	V	
Current of digital supply voltage		I_{VDD}	-	430	650	mA	Note3
Power consumption		P	-	1419	2145	mW	

Table 5.1.1 Operating Voltages

Note1: RA test is performed under VDD=3.3V.
Note2: Input Signal Voltage contain AG Mode/HSD.
Note3: VDD is 3.3V on the white pattern; For different LCM, the value may have a bit of difference.

5.2 DC Characteristics for Backlight Driving

Ta=25℃

Item	Symbol	Min	Typ	Max	Unit	Remark
Power for LED driving circuit	VCC	10.8	12.0	13.2	V	
Current of Backlight Power	I_{VCC}	-	330	495	mA	
Backlight Power Consumption	W_{BL}	-	3960	5940	mW	
Dimming Frequency	F_{PWM}	0.1K	-	20K	Hz	
Dimming duty cycle	-	1%	-	100%	-	
High Level Input Voltage	V_{IH}	2.5	3.3	5	V	For Dimming, EN pin
Low Level Input Voltage	V_{IL}	0	-	0.5	V	For Dimming, EN pin
LED Life time	-		50000		Hr	

Table 5.2.1 LED Backlight Characteristics

Note1: Optical performance should be evaluated at Ta=25℃ only.
If LED is driven by high current, high ambient temperature & humidity condition, the life time of LED will be reduced.
Operating life means brightness goes down to 50% initial brightness.
Typical operating life time is estimated data.

5.3 Recommended Power ON/OFF Sequence

Item	Symbol	Min	Typ	Max	Unit	Remark
VCC on to VCC stable	Tp1	1	-	25	ms	-
VCC stable to signal on	Tp2	2	-	50	ms	-
Signal on to EN on	Tp3	200	-	-	ms	-
Dimming on to EN on	Tp4	0	-	200	ms	-
VLED to Dimming on	Tp5	10	-	-	ms	-
VLED on to VLED stable	Tp6	0.5	-	100	ms	-
VCC off time	Tp7	0	-	10	ms	-
VCC off to next VCC on	Tp8	500	-	-	ms	-
Signal off before VCC off	Tp9	0	-	50	ms	-
EN off before signal off	Tp10	200	-	-	ms	-
EN off before Dimming off	Tp11	0	-	200	ms	-
Dimming off before VLED off	Tp12	10	-	-	ms	-

Table 5.3.1 Power on/off sequence

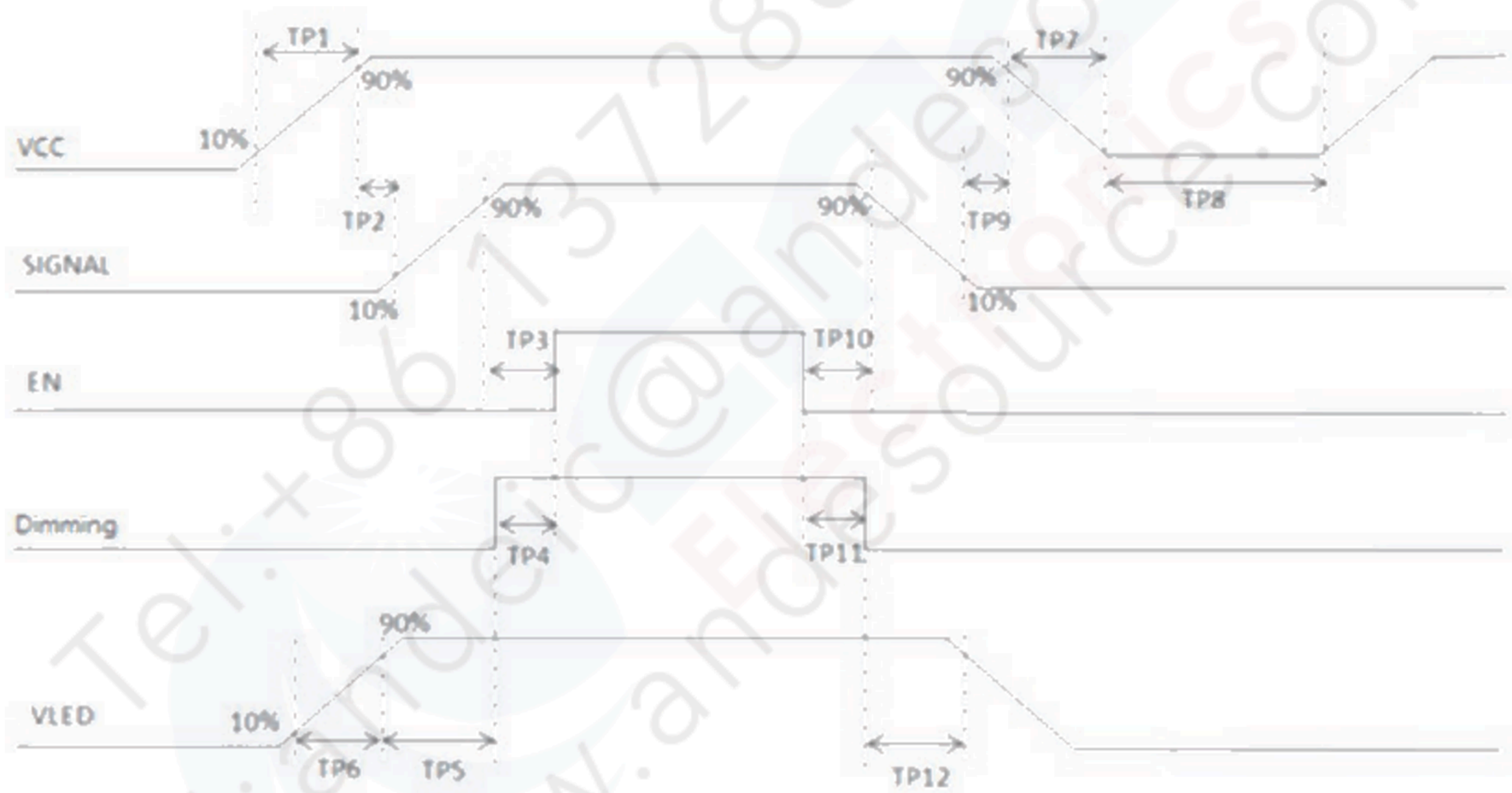

Figure 5.3.1 Interface power on/off sequence

5.4 LCD Module Block Diagram

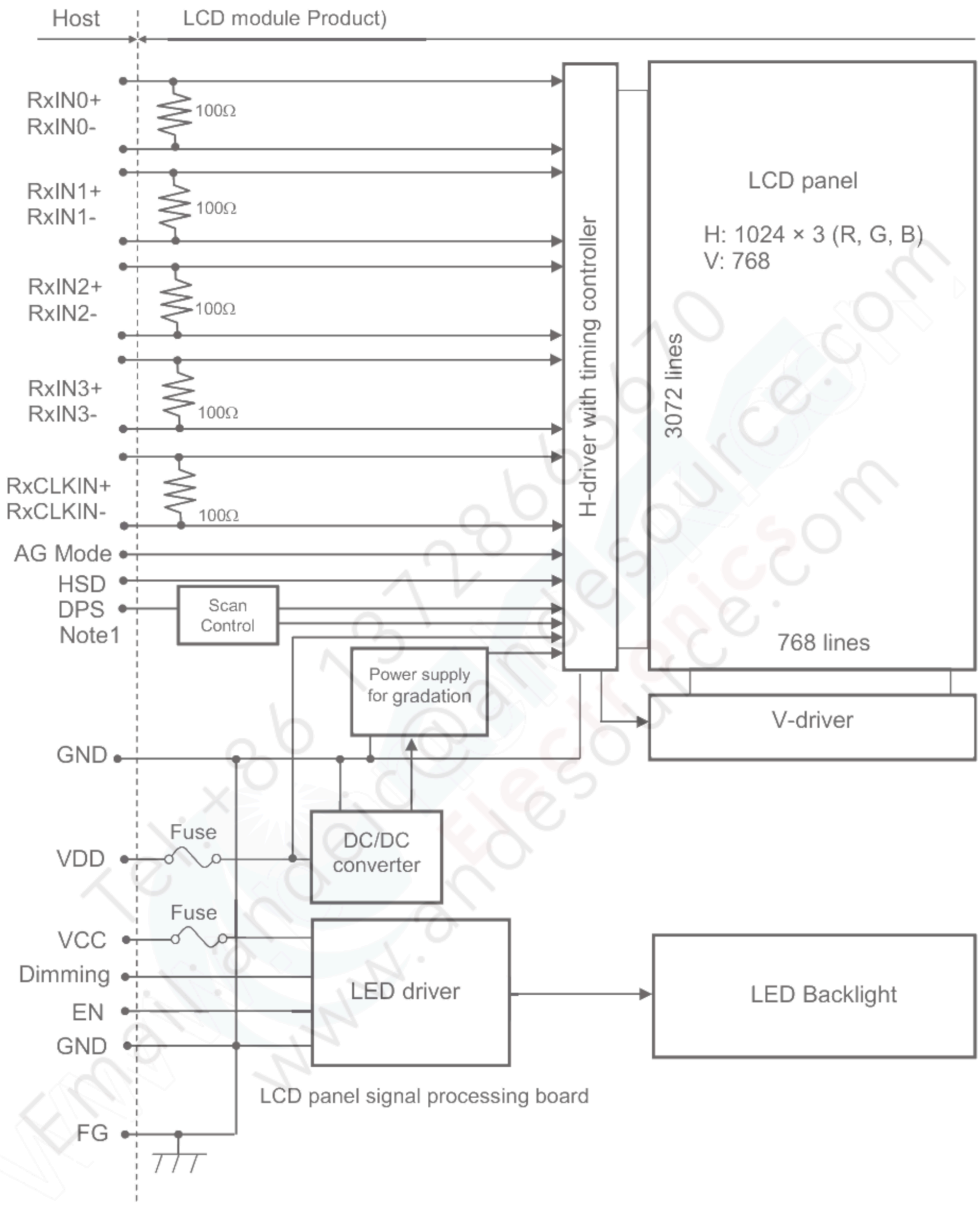

Figure 5.4.1 LCD Module Block Diagram

Note 1: Refer to Figure 3.1.3 for detailed circuit design.

6. Timing Characteristics

6.1 Timing Parameter

Parameter	Symbol	Min.	Typ.	Max.	Unit	Condition
Differential Input high Threshold voltage	R_{XVTH}	-	-	+0.2	V	R_{XVCM}=1.2V
Differential Input Low Threshold voltage	R_{XVTL}	-0.2	-	-	V	
Input voltage range (signaled-end)	R_{XVIN}	0	-	VDD-1.2	V	-
Differential Input common Mode voltage	R_{XVCM}	$\|V_{ID}\|/2$	-	VDD-1.2-$\|V_{ID}\|/2$	V	-
Differential Input voltage	$\|V_{ID}\|$	0.2	-	0.6	V	-

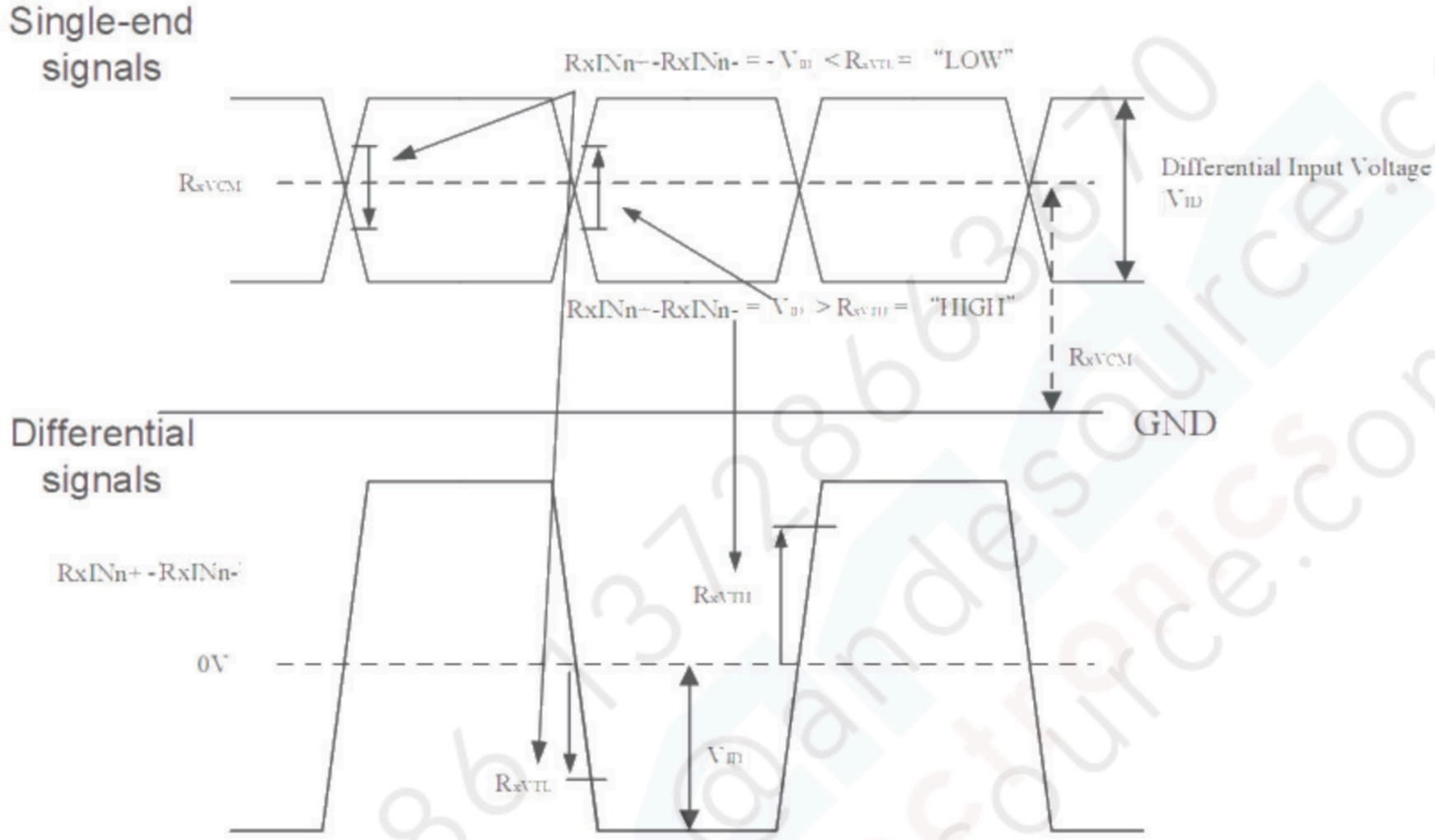

6.2 LVDS mode AC electrical characteristics

Parameter	Symbol	Min	Typ	Max	Unit	Condition
Clock frequency	RXFCLK	20	-	71	Mhz	
Input data skew margin	TRSKM	-	-	500	Ps	|VID|=400mV RXVCM=1.2V RXFCLK=71MHz
Clock high time	TLVCH	-	4/(7*RXFCLK)	-	ns	
Clock low time	TLVCL	-	3/(7*RXFCLK)	-	ns	
Rspos1 time	Rspos1	0UI-TRSKM	-	1UI+ TRSKM	ns	UI=1/RXFCLK/7
Rspos2 time	Rspos2	1UI- TRSKM	-	2UI+ TRSKM	ns	UI=1/RXFCLK/7
Rspos7 time	Rspos7	6UI- TRSKM	-	7UI+ TRSKM	ns	UI=1/RXFCLK/7
Strobe width	TSW	0.5	-	-	UI	

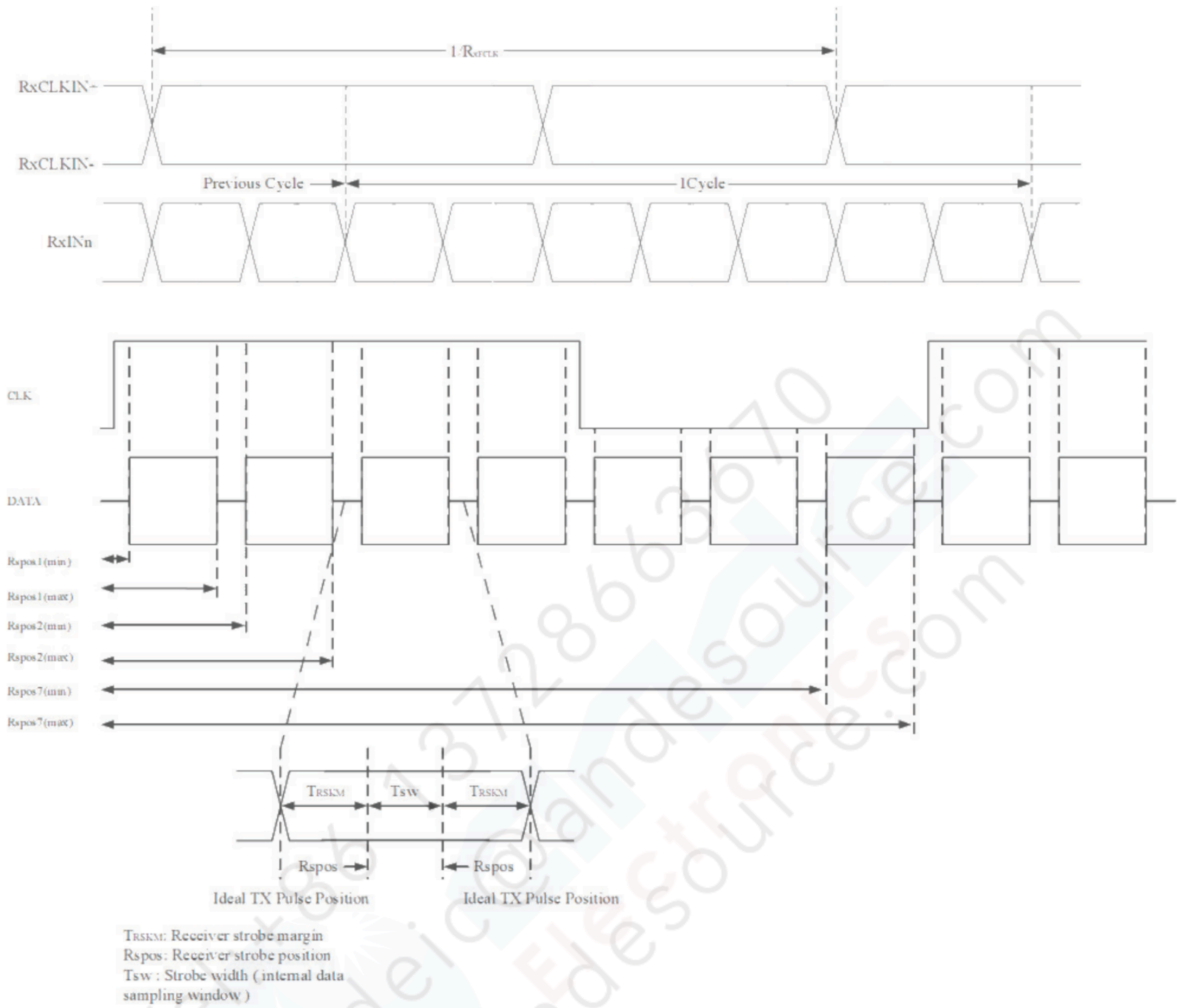

6.3 Recommended Input Timing of LVDS transmitter

Parameter		Symbol	Min.	Typ.	Max.	Unit	Remarks
Dclk frequency		1/tclk	53	65	71	MHz	-
Horizontal section	Horizontal total	th	1136	1344	1400	DCLK	-
	Horizontal blanking	thb	112	320	376	DCLK	-
	Valid Data Width	thd	1024			DCLK	-
Vertical section	Frame rate	-	-	60	-	Hz	-
	Vertical total	tv	778	806	845	Th	-
	Vertical blanking	tvb	10	38	77	Th	-
	Valid Data Width	tvd	768			Th	-

Table 6.3.1 Input Setup Timing Parameters Requirement

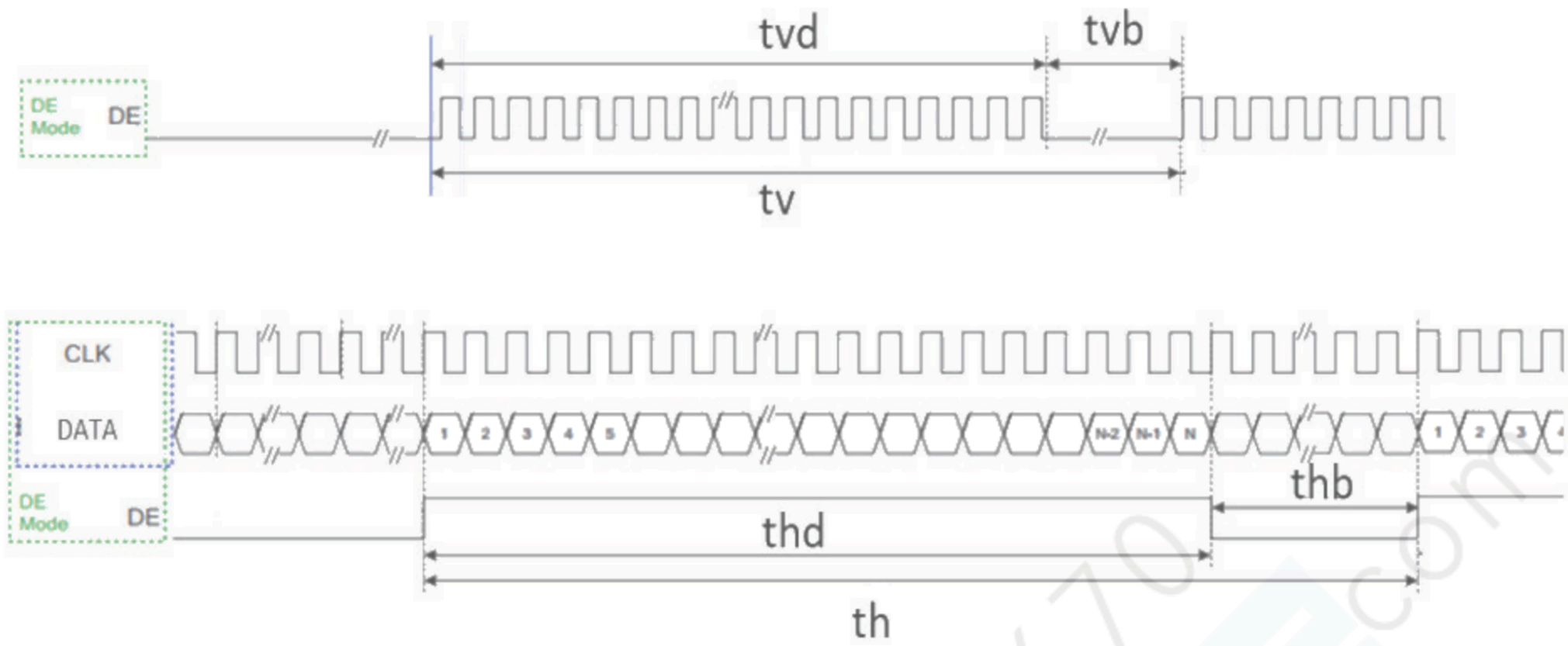

Figure 6.3.1 Clock and Data Input Timing Diagram

7. Optical Characteristics

Item		Symbol	Condition	Min	Typ	Max	Unit	Remark
View Angles		θT	CR≧10	75	85		Degree	Note2,3
		θB		75	85			
		θL		75	85			
		θR		75	85			
Contrast Ratio		CR	θ=0°	1000	1200			Note 3
Response Time		T_{ON}	25℃	-	35	45	ms	Note 4
		T_{OFF}						
Chromaticity	White	x	Backlight is on	0.258	0.308	0.358		Note 1,5
		y		0.282	0.332	0.382		
	Red	x		0.548	0.598	0.648		Note 1,5
		y		0.272	0.322	0.372		
	Green	x		0.283	0.333	0.383		Note 1,5
		y		0.547	0.597	0.647		
	Blue	x		0.104	0.154	0.204		Note 1,5
		y		0.062	0.112	0.162		
Uniformity		U		75	85		%	Note 6
NTSC				45	50		%	Note 5
Luminance		L		400	500		cd/m^2	Note 7

Table 7.1 Optical Parameters

Test Conditions:

1. The ambient temperature is 25±2℃.humidity is 65±7%.
2. The test systems refer to Note 1 and Note 2.

Note1: Definition of optical measurement system.

The optical characteristics should be measured in dark room. After 5 Minutes operation, the optical characteristics are measured at the center point of the LCD screen.

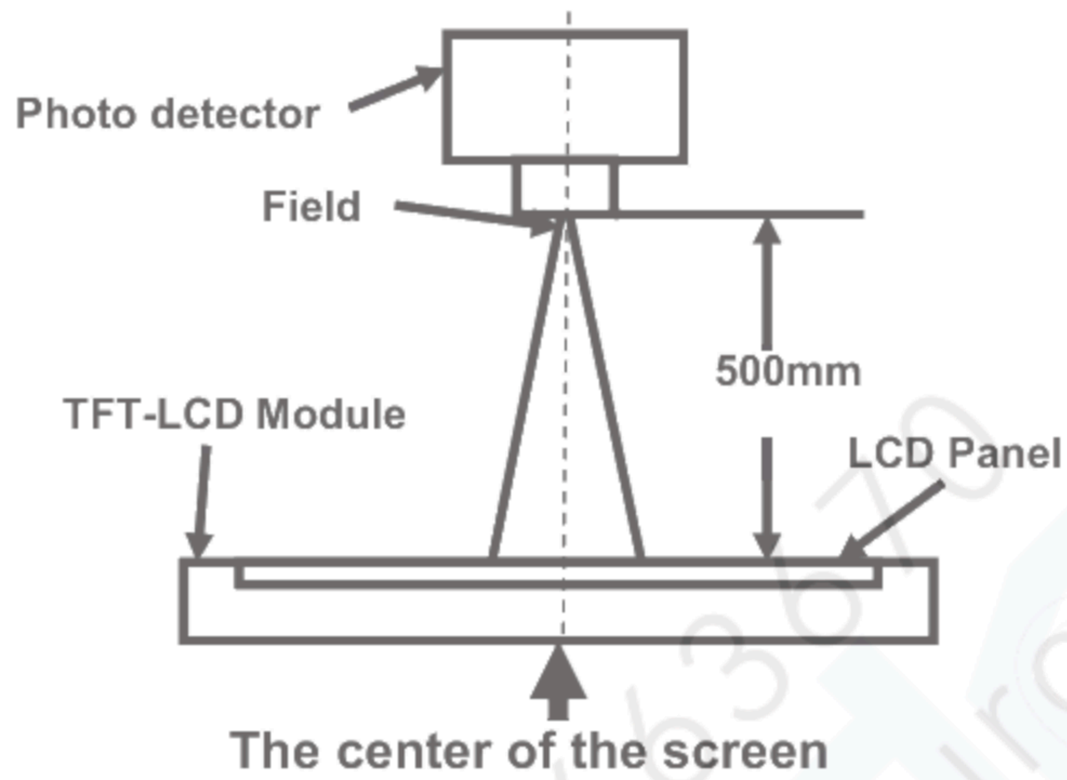

Fig1. Measurement Set Up

Note2: Definition of viewing angle range and measurement system. Viewing angle is measured at the center point of the LCD .

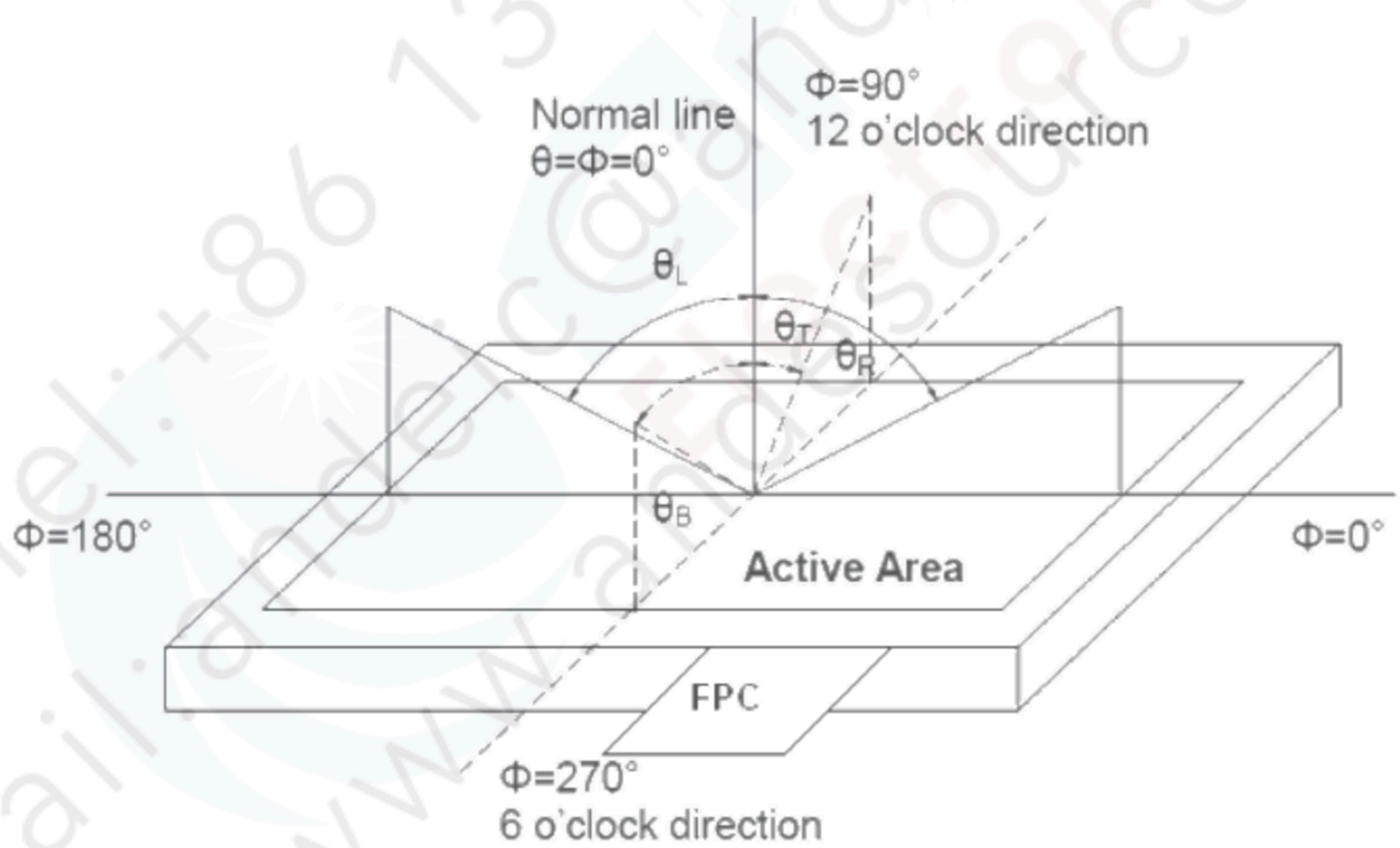

Fig2. Measurement viewing angle

Note3: Definition of contrast ratio

$$\text{Contrast ratio (CR)} = \frac{\text{Luminance measured when LCD is on the "White" state}}{\text{Luminance measured when LCD is on the "Black" state}}$$

Note4: Definition of Response time

For SFT LCM, the response time is defined as the LCD optical switching time interval between "White" state and "Black" state. Rise time (T_r) is the time between photo detector output intensity changed from 10% to 90%. And fall time (T_f) is the time between photo detector output intensity changed from 90% to 10%.

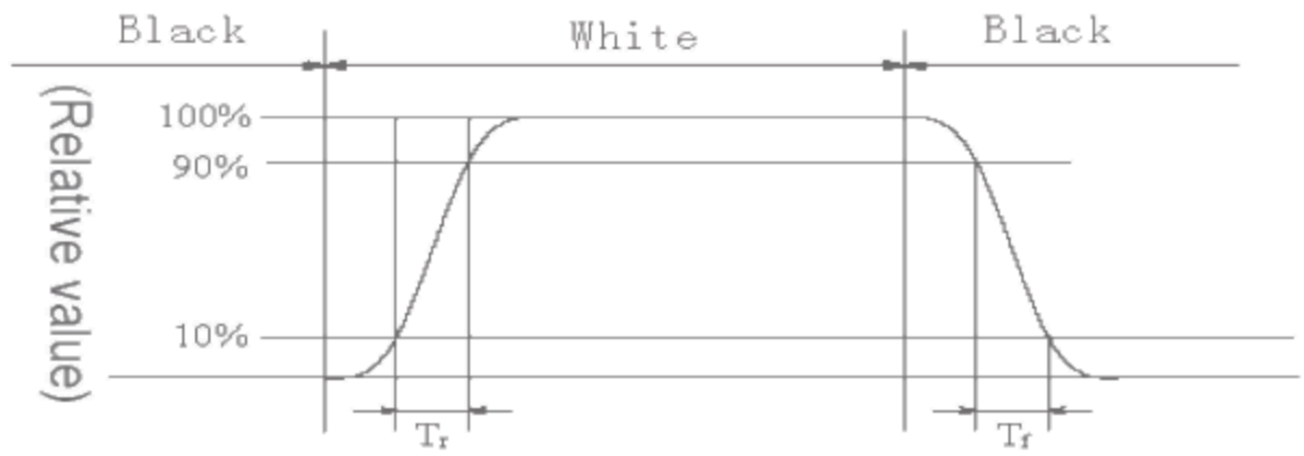

Fig4. Response Time Testing(SFT)

Note5: Definition of color chromaticity (CIE1931)

Color coordinates measured at center point of LCD.

Note6: Definition of Luminance Uniformity

Active area is divided into 9 measuring areas (Refer Fig.5). Every measuring point is placed at the center of each measuring area.

Luminance Uniformity (U) = Lmin/ Lmax

Lmax: The measured Maximum luminance of all measurement position.

Lmin: The measured Minimum luminance of all measurement position.

L-------Active area length; W----- Active area width

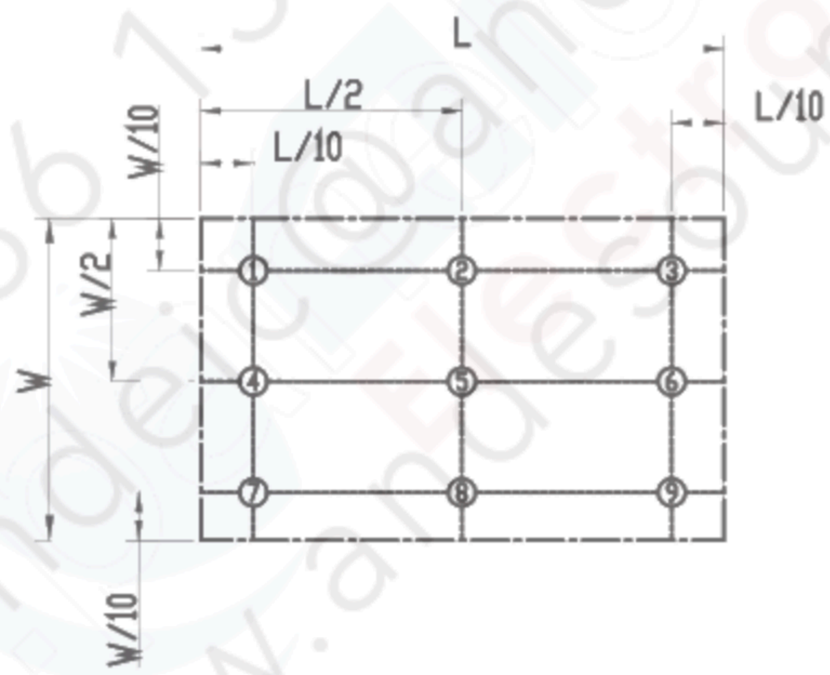

Fig5. Luminance Uniformity Measurement Locations(9 points)

Note7: Definition of Luminance:

Measure the luminance of white state at center point.

8. Reliability Test

No	Test Item	Condition	Remark
1	High Temperature Operation	Ta=+70℃, 240hrs	IEC60068-2-1:2007,GB2423.2-2008
2	Low Temperature Operation	Ta=-20℃, 240hrs	IEC60068-2-1:2007 GB2423.1-2008
3	High Temperature Storage (non-operation)	Ta=+80℃, 240hrs	IEC60068-2-1:2007 GB2423.2-2008
4	Low Temperature Storage (non-operation)	Ta=-30℃, 240hrs	IEC60068-2-1:2007 GB2423.1-2008
5	High Temperature & High Humidity Operation	Ta = +60℃, 90% RH max,240 hours	IEC60068-2-78 :2001 GB/T2423.3—2016
6	Thermal Shock (non-operation)	-30℃ 30 min~+80℃ 30 min, Change time:5min,100cycles	Start with cold temperature, End with high temperature, IEC60068-2-14:1984,GB2423.22-2012
7	Electro Static Discharge (operation)	C=150pF,R=330Ω; 5point/panel Contact:±4Kv, 5times; Air:±8KV,5times;	IEC61000-4-2:2008 GB/T17626.2-2018
8	Vibration (non-operation)	Frequency range:10～55Hz, Stroke:1.5mm Sweep:10Hz～55Hz～10Hz 2hours for each direction of X.Y.Z (6 hours total)	IEC60068-2-6:2007 GB/T2423.10—2019
9	Shock (non-operation)	60G 6ms, ±X,±Y,±Z 3 times for each direction	IEC60068-2-27:2008 GB/T2423.5—2019
10	Package Drop Test	Height: X cm,1 corner, 3edges, 6 surfaces （X depends on 1box weight · ＞10Kg：60cm ; ≤10Kg：80cm）	GB/T 4857.5-1992

Table 8.1 RA test condition

Note1: Ta is the ambient temperature of sample.

Note2: Before cosmetic and function test, the product must have enough recovery time, at least 24 hours at room temperature.

Note3: In the standard condition, there shall be no practical problem that may affect the display function. After the reliability test, the product only guarantees operation, but don't guarantee all of the cosmetic specification.

9. Mechanical Drawing

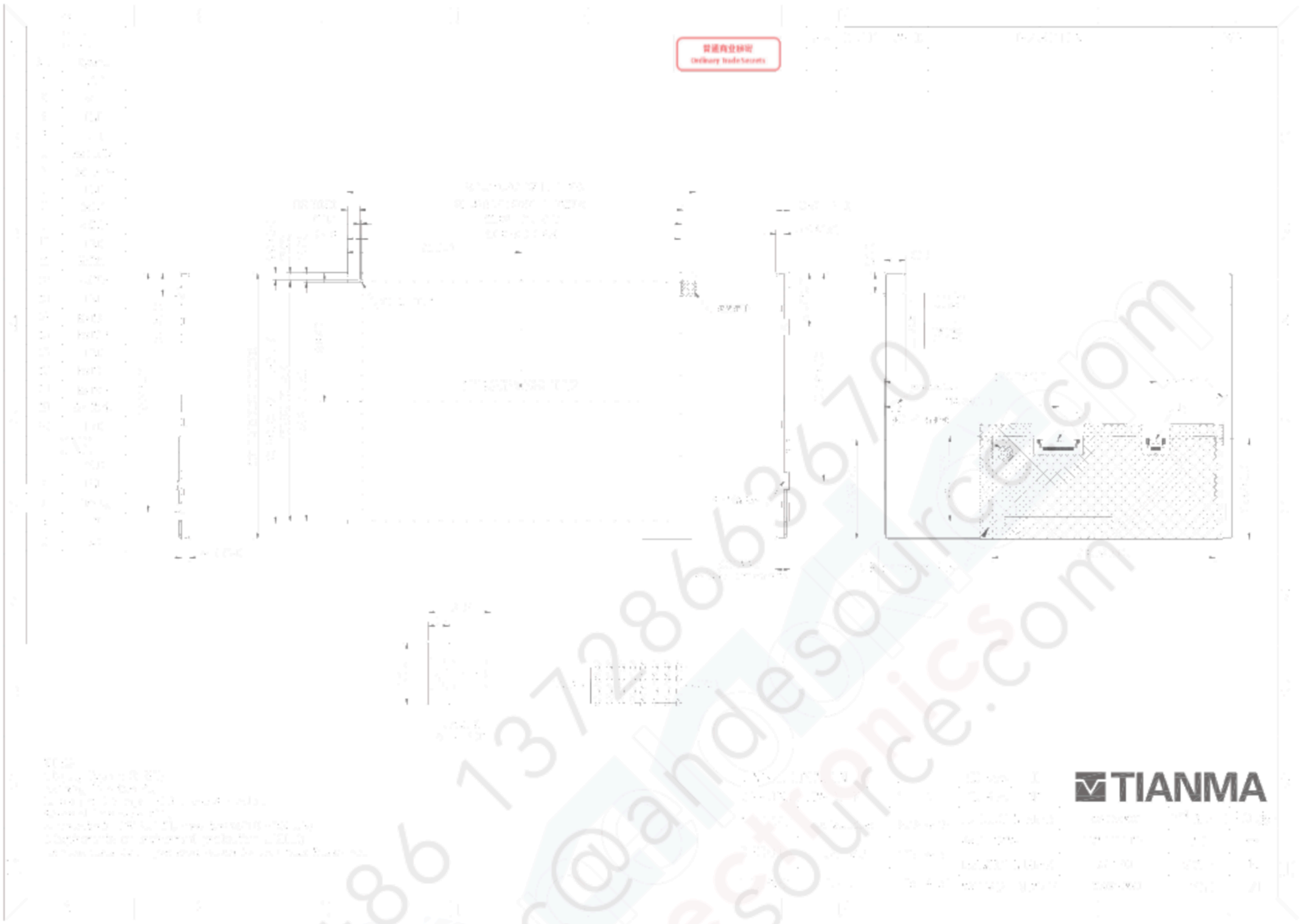

10. Packing Instruction

No	Item	Model (Materiel)	Dimensions(mm)	Unit Weight(Kg)	Quantity
1	LCM Module	P1040XGF1MB01	230.00×175.80×5.70	0.430	18
2	Tray	PET(transmittance)	485×330×19	0.258	12
3	Dust-Proof Bag	PE	700×545×0.05	0.05	1
4	BOX	Corrugated Paper	520×345×74	0.369	3
6	Carton	Corrugated Paper	544×365×250	0.76	1
7	Total Weight	12.753±5%			

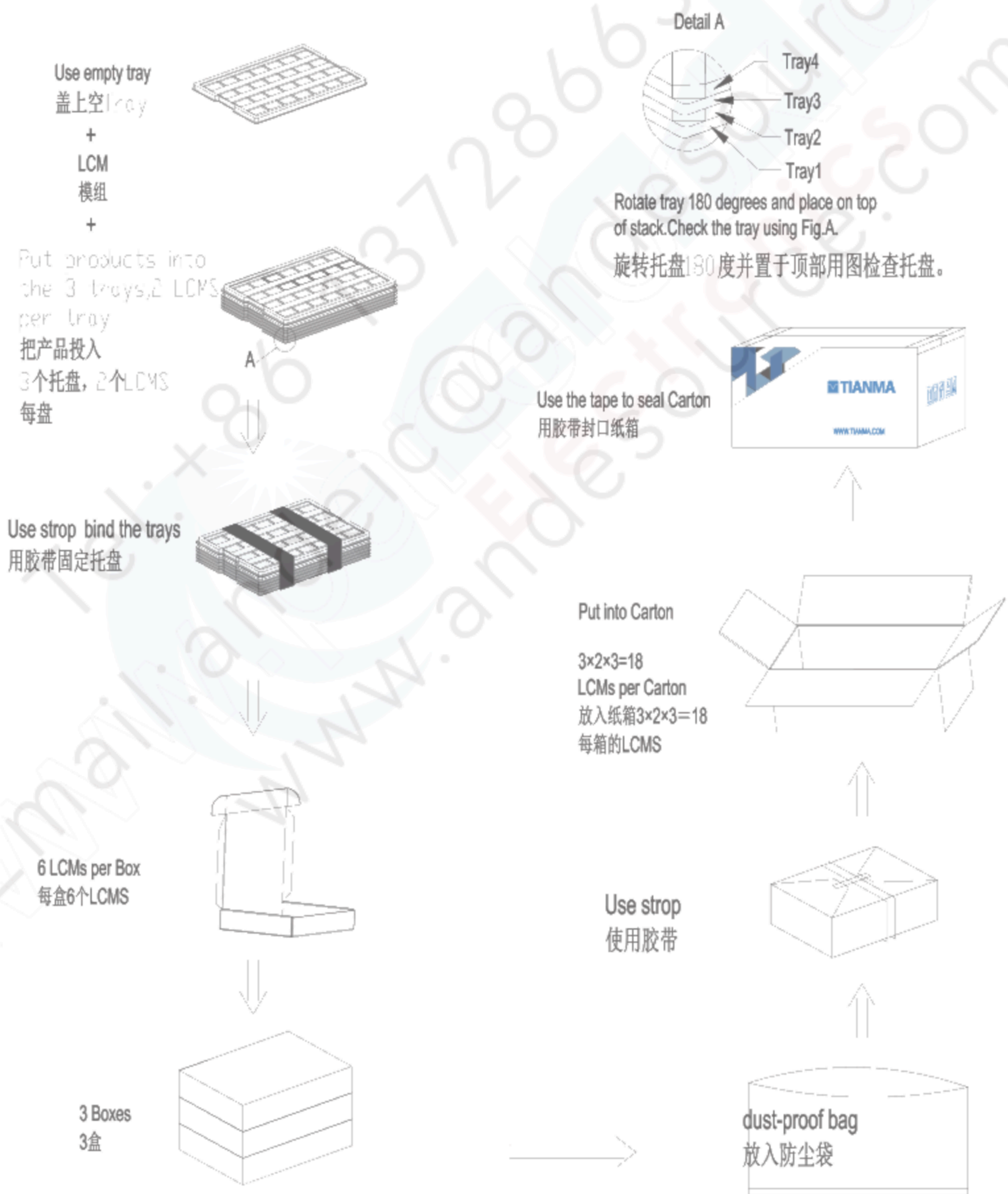

11. Precautions for Use of LCD Modules

11.1 Handling Precautions

(1) The display panel is made of glass. Do not subject it to mechanical shock by dropping it, etc.
(2) If the display panel is damaged and the liquid crystal fluid inside it leaks out be sure not to get any in your mouth. If the fluid comes into contact with your skin or clothes promptly wash it off using soap and water.
(3) Do not apply excessive force to the display surface or the bezel since this may cause the color tone to vary.
(4) The polarizer covering the display surface of the LCD module is soft and easily scratched. Handle the polarizer carefully.
(5) If the display surface is contaminated, breathe on the surface and gently wipe it with a soft dry cloth. If it is still not completely clear use a moist cloth with one of the following solvents:
- Isopropyl alcohol
- Ethyl alcohol

Solvents other than those mentioned above may damage the polarizer. Specifically, do not use the following:
- Water
- Ketone
- Aromatic solvents

(6) Do not disassemble the LCD Module.
(7) If powered off, do not apply the input signals.
(8) To prevent destruction of the module by static electricity, be careful to maintain an optimum work environment.
(9) Be sure to ground your body when handling the LCD Modules.
(10) Tools used for assembly, must be properly grounded.
(11) To reduce the amount of static electricity generated, do not conduct assembly or other work under very low humidity conditions.
(12) The LCD Module is covered with a film to protect the display surface, remove film slowly under the ionizer.

11.2 Storage precautions

(1) When storing the LCD modules avoid exposure to direct sunlight or to the light of fluorescent lamps.
(2) The LCD modules should be stored within the rated storage temperature range. The recommend condition is: Temperature: 0 ~ 35 ℃ at normal humidity.
(3) The LCD modules should be stored in a room without acid, alkali or other harmful gas.

11.3 Transportation Precautions

The LCD modules should not be dropped or subject to violent mechanical shock during transportation. Also they should avoid excessive pressure, water, high humidity and direct sunlight.

11.4 Screen saver Precautions

Not display the fixed pattern for a long time. Use a screen saver, if the fixed pattern is displayed on the screen

11.5 Safety Precautions

(1) When you waste damaged or unnecessary LCDs, it is recommended to crush LCDs into pieces and wash them off with solvents such as acetone and ethanol, which should later be burned
(2) Be sure to turn off the power supply when inserting or disconnecting the LED backlight cable.
(3) LED driver should be designed to limit or stop its function when over current is detected on the LED.