SPECIFICATION

Customer Part Number: …
Tianma Part Number: **TM101DDHG01-72**
Product Description: **10.1” 1024xRGBx600 TFT-LCD Module**

[ ] Target Specification
[◉] Preliminary Specification
[ ] Final Specification

Customer		Industrial Product Dept, PDBU Tianma Microelectronics Co., Ltd	
Signatures	Date	Approved By	Date
		Reviewed By	
		Prepared By	
		Gang.Li	2021-07-02

Comments:

* This cover page is for your Comments and Signatures back to TIANMA.

REVISION HISTORY

Rev	Date	Page	Revision Items	Editor
1.0	2021-07-02	-	Preliminary SPEC released.	Gang.Li

CONTENTS

1. Summary

1.1 General Description

This is a 10.1 inch Amorphous-TFT-LCD (Thin Film Transistor Liquid Crystal Display) module with Normally White technology. This product is designed for industrial applications.

1.2 Features

- 30Khrs LED life time
- LED driver is embedded
- 1 port LVDS 6/8bit selectable interface
- Display direction control
- Anti-glare surface treatment
- ROHS Compliant with the European RoHS Directive (2011/65/EU) and Delegated Directive (2015/863/EU, Amending Annex II of 2011/65/EU)

2. General Specification

Feature		Spec
Display Spec.	Size	10.1 inch
	Resolution	1024(RGB)x600
	Pixel Pitch (mm)	0.2175x0.2088
	Technology Type	a-Si
	Pixel Configuration	R.G.B Vertical Stripe
	Display Mode	TN, Normally White
	Surface Treatment	Anti-Glare
	Viewing Direction	12 o'clock
	Gray Scale Inversion Direction	6 o'clock
Mechanical Characteristics	LCM (W x H x D) (mm)	235.00 x 143.00 x 4.9
	Active Area(mm)	222.72 x 125.28
	Weight (g)	272
	Matching Connection Type	IPEX 20453-040T-01
Optics	Luminance(nits)	450
	Contrast ratio	800
	NTSC	47%
	Viewing Direction	12 o'clock
	Gray Scale Inversion Direction	6 o'clock
	Viewing angle(U/D/L/R)	75/80/80/80(TN)
Electrical Characteristics	Interface	1 port LVDS(6/8bit selectable)
	Color Depth	262K/16.2M
	Power consumption	LCD:726mW(Black pattern) Backlinght:4800mW(Duty=100%)
	Power supply voltage	LCD panel: 3.3V LED : 12V

Table 2.1 General TFT Specifications

Note 1: For TN LCM: Viewing direction for best image quality is different from TFT definition. There is a 180 degree shift.

Note 2: LCM weight tolerance: ± 5%

3. Input / Output Terminals

3.1 CN1 Pin assignment (LCD Interface)

Connector Information	
LCD Module connector	IPEX 20455-040E-76
Matching connector	IPEX 20453-040T-01 or compatible

Pin	Symbol	I/O	Description	Remark
1	NC	-	No connection(Reserve)	
2	VCCS	P	Power supply(3.3V typ)	
3	VCCS	P	Power supply(3.3V typ)	
4	VEDID	P	DDC 3.3V power	If EDID function is not used, please keep it floating.
5	NC	-	No connection(Reserved for TM test)	
6	CLKEDID	I	DDC clock	If EDID function is not used, please keep it floating.
7	DATAEDID	I	DDC data	
8	Rxin0-	I	LVDS differential data input(R0~R5,G0)	
9	Rxin0+	I		
10	VSS	P	Ground	
11	Rxin1-	I	LVDS differential data input(G1~G5,B0~B1)	
12	Rxin1+	I		
13	VSS	P	Ground	
14	Rxin2-	I	LVDS differential data input (B2~B5,-,-,DE)	
15	Rxin2+	I		
16	VSS	P	Ground	
17	RxCLK-	I	LVDS differential clock input	
18	RxCLK+	I		
19	VSS	P	Ground	
20	Rxin3-	I	LVDS differential data input (R6~R7,G6~G7,B6~B7)	Note1
21	Rxin3+	I		
22	VSS	P	Ground	
23	NC	-	No connection(Reserved for TM test)	
24	NC	-	No connection(Reserved for TM test)	
25	VSS	P	Ground	
26	NC	-	No connection(Reserved for TM test)	
27	SEL68	I	LVDS 6/8 bit selection control.	

			SEL68="H":8bit SEL68="L" or NC:6bit	
28	VSS	P	Ground	
29	SHLR	I	Horizontal display direction control Internally pulled high with 4.7KΩ resistor.	Note2
30	UPDN	I	Vertical display direction control Internally pulled low with 4.7KΩ resistor.	
31	LED_GND	P	LED ground	
32	LED_GND	P	LED ground	
33	LED_GND	P	LED ground	
34	NC	-	No connection(Reserve)	
35	LED_PWM	I	PWM control signal of LED converter	
36	LED_EN	I	Enable control signal of LED converter	
37	NC	-	No connection(Reserve)	
38	LED_VCCS	P	LED power supply(12V typ)	
39	LED_VCCS	P	LED power supply(12V typ)	
40	LED_VCCS	P	LED power supply(12V typ)	

Table 3.1 Pin Assignment for LCD Interface

I/O definition: I---Input, O---Output, P---Power/Ground, N---No connection

Note1: Connect to GND for 6bit LVDS input.

Note2: Users could leave 29&30th pin open for default setting.
Users should connect these pins to VCC or GND directly or via 0Ω resistor when display differently.
Scan direction is shown as below (PCB at down side):

SHLR=H, UPDN=L SHLR=L, UPDN=H

4. Absolute Maximum Ratings

GND=0V

Item	Symbol	Min	Max	Unit	Remark
Power Voltage	VCCS	2.8	3.6	V	
EDID drive Voltage	VEDID	-0.3	4	V	
Converter Input Voltage	LED_VCCS	4.2	24	V	
Converter Control Signal Voltage	LED_PWM	-0.3	5.3	V	
Converter Control Signal Voltage	LED_EN	-0.3	5.3	V	
Operating Temperature	TOPR	-20	70	℃	
Storage Temperature	TSTG	-30	80	℃	
Relative Humidity Note1	RH	--	≤95	%	Ta≤40℃
		--	≤85	%	40℃<Ta≤50℃
		--	≤55	%	50℃<Ta≤60℃
		--	≤36	%	60℃<Ta≤70℃
		--	≤24	%	70℃<Ta≤80℃
Absolute Humidity	AH	--	≤70	g/m³	Ta>70℃

Table 4.1 Absolute Maximum Ratings

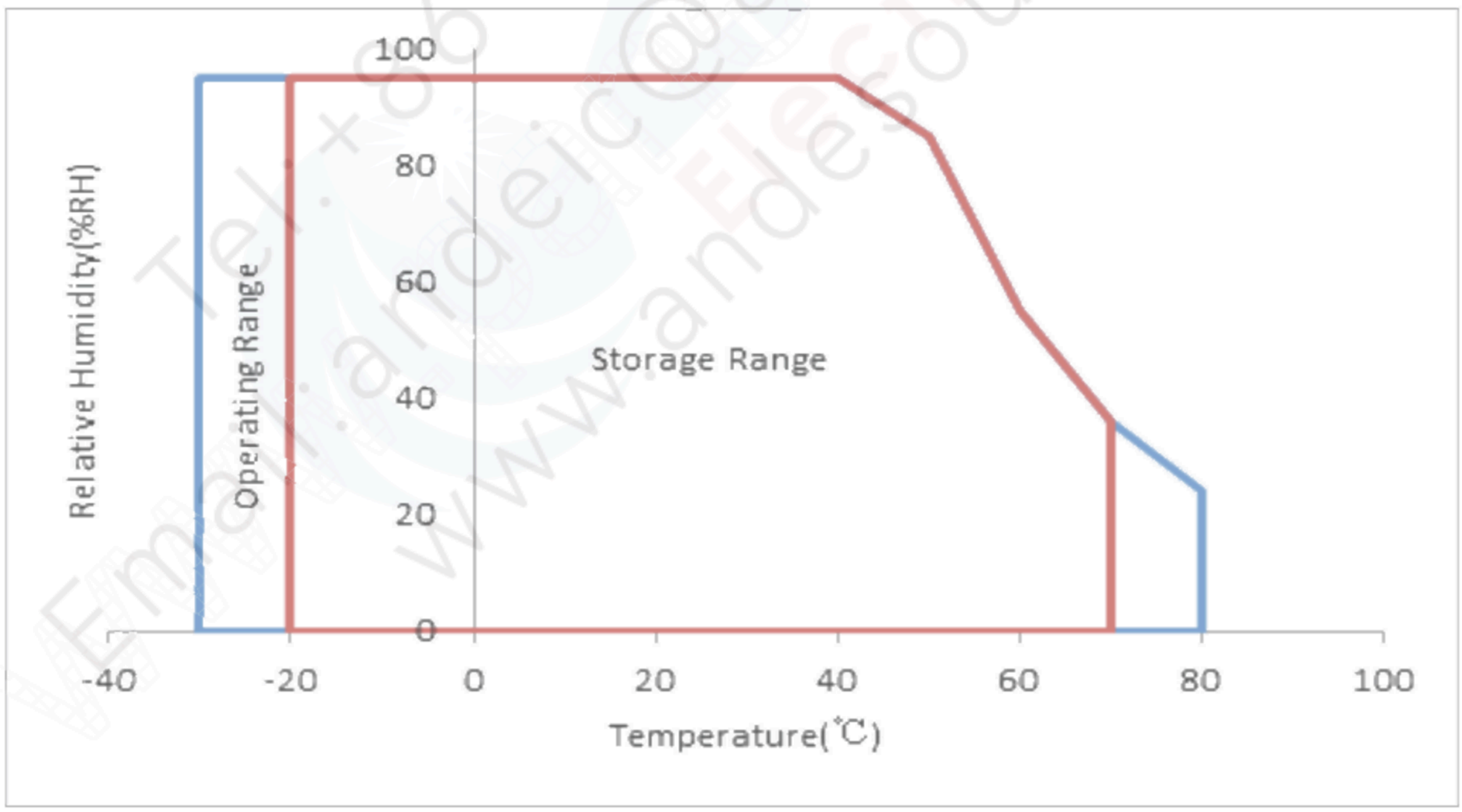

Table 4.2 Absolute Maximum Ratings chart

Note1: Input voltage include all in put data.

Note2: Ta means the ambient temperature.
It is necessary to limit the relative humidity to the specified temperature range.
Condensation on the module is not allowed.

Note3: The absolute maximum rating values of this product are not allowed to be exceeded at any times. When exceeded the maximum ratings, the characteristics of the module may not be recovered, or in an extreme condition, the module may be permanently destroyed.

5. Electrical Characteristics

5.1 DC Characteristics for Panel Driving

GND=0V, Ta = 25℃

Item	Symbol	Min	Typ	Max	Unit	Remark
POWER Supply Voltage	VCCS	3.00	3.30	3.60	V	
Differential input high threshold voltage	R_{xVTH}	-	-	+0.1	V	R_{xVCM} =1.2V Note1
Differential input low threshold voltage	R_{xVTL}	-0.1	-	-	V	
Input voltage range (singled-end)	R_{xVIN}	0	-	2.4	V	
Differential input common mode voltage	R_{xVCM}	$\|V_{ID}\|/2$	-	$2.4-\|V_{ID}\|/2$	V	
Differential input voltage	$\|V_{ID}\|$	0.2	-	0.6	V	
Current of VDD Power supply	IVDD	-	220	-	mA	Note2
Power consumption of VDD	WVDD	-	726	-	mW	
Inrush current of VDD	Irush	-	-	1.5	A	Note3

Table 5.1 DC Characteristics

Note1:To test the current dissipation, use “all Black Pattern”.

Note1: LVDS characteristics

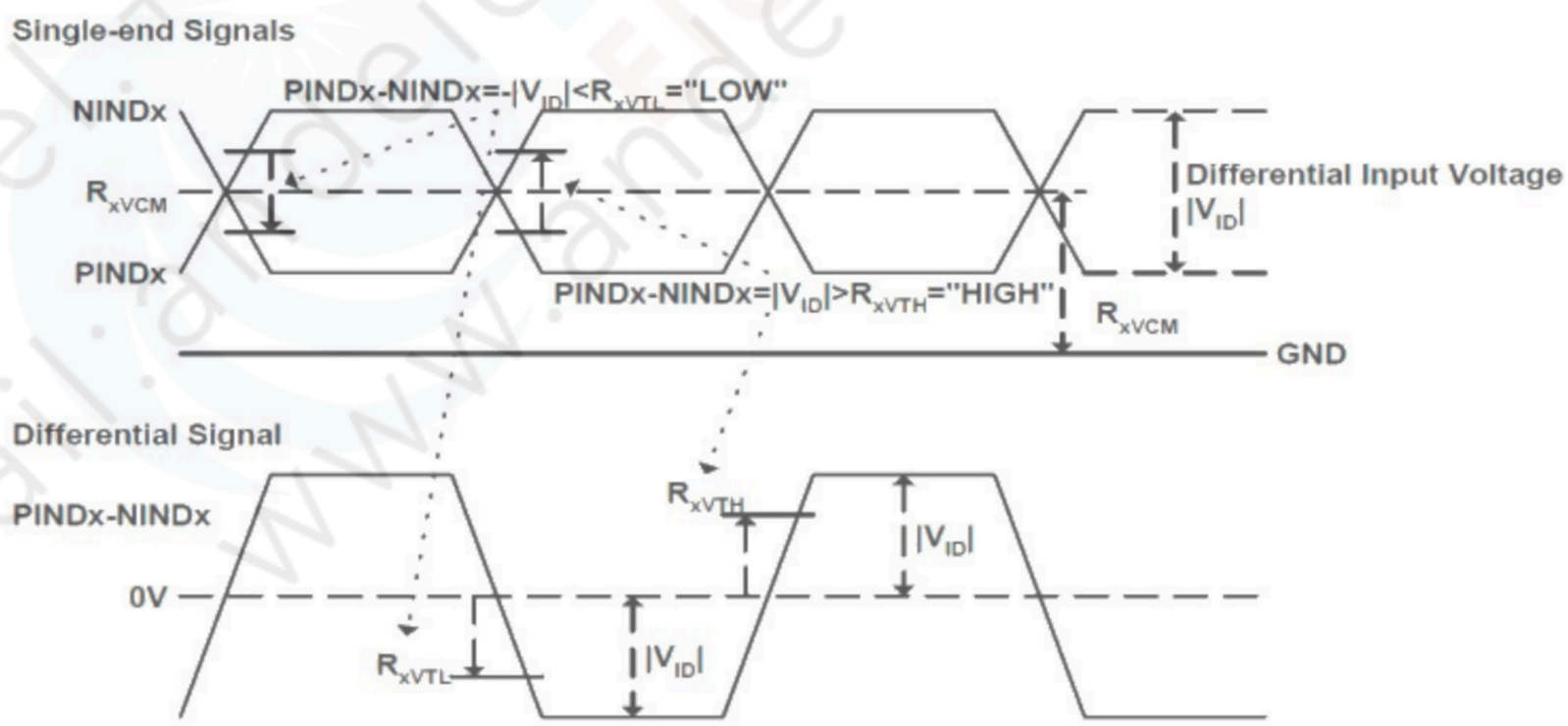

Note2: To test the current dissipation, use “all Black Pattern”.

Note3: Inrush current definition.

Vcc rising time is 470μs

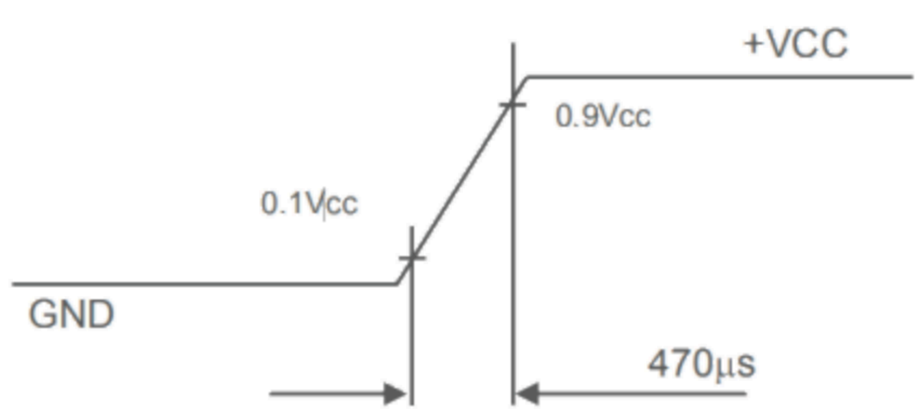

5.2 DC Characteristics for Backlight Driving

GND=0V, Ta = 25℃

Item		Symbol	Min	Typ	Max	Unit	Remark
Power supply voltage		LED_VCC	-	12V	-	V	
Power supply current		I_{LED}	-	400	-	mA	
Input voltage for PWM signal	High	VDFH1	2	-	LED_VCC	V	
	Low	VDFL1	0	-	0.8	V	
Input voltage for EN signal	High	VDFH2	2	-	LED_VCC	V	
	Low	VDFL2	0	-	0.8	V	
PWM frequency		fpwm	100	-	100K	Hz	
PWM duty cycle		Dim(Fpwm=100 ~10khz)	1	-	-	%	Dim setting must be more than minimum always
		Dim(Fpwm=10k hz~100khz)	10	-	-	%	
PWM pulse width		tPWH	5	-	-	us	
LED lifetime		--	20000	30000	-	hrs	

Table 5.2 LED Backlight Characteristics

Note 1: Optical performance should be evaluated at Ta=25℃ only.
2: If LED is driven by high current, high ambient temperature & humidity condition. The life time of LED will be reduced.
3: Operating life means brightness goes down to 50% of initial brightness. Typical operating life time is an estimated data.

5.3 Recommended Power ON/OFF Sequence

Item	Symbol	Min	Typ	Max	Unit	Remark
VCC on to VCC stable	Tp1	0.5	-	10	ms	
VCC stable to signal on	Tp2	0	-	50	ms	
Signal on to LED_EN on	Tp3	200	-	-	ms	
LED_PWM on to LED_EN on	Tp4	0	-	200	ms	
LED_VCCS to LED_PWM on	Tp5	10	-	-	ms	
LED_VCCS on to LED_VCCS stable	Tp6	0.5	-	10	ms	
VCC off time	Tp7	0	-	10	ms	
VCC off to next VCC on	Tp8	500	-	-	ms	
Signal off before VCC off	Tp9	0	-	50	ms	
LED_EN off before signal off	Tp10	200	-	-	ms	
LED_EN off before LED_PWM off	Tp11	0	-	200	ms	
LED_PWM off before LED_VCCS off	Tp12	10	-	-	ms	

Table 5.3 Power ON/OFF Sequence

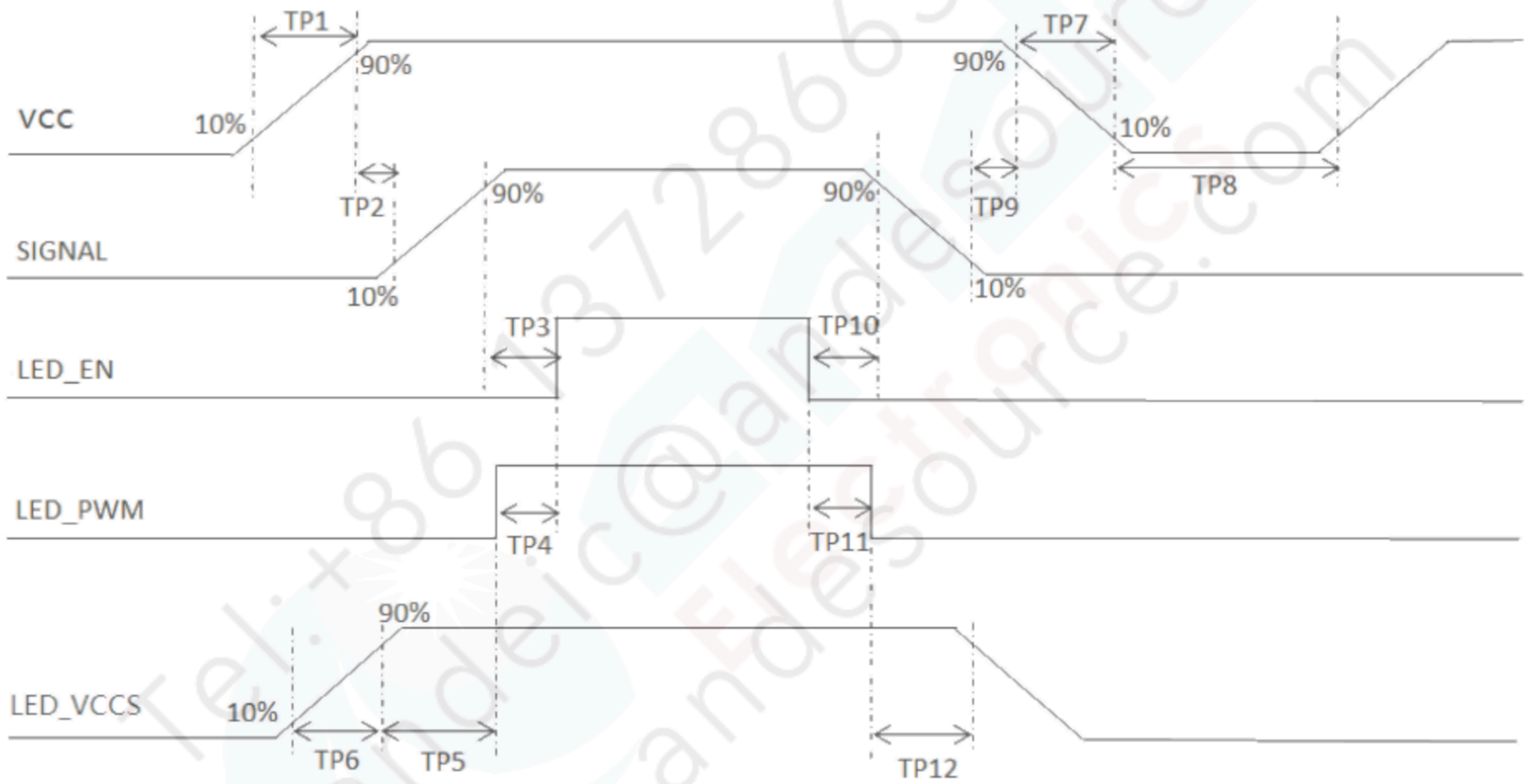

Figure 5.3 Power ON/OFF Sequence

Note1: T1 means the time of input voltage rise from 10% to 90% of VCC.
Note2: The low level of these signals and analog powers are GND level.
Note3: All of the power and signals should be kept at GND level before power on. If there are residual voltages on them, the LCD might not work properly.
Note4: Keep backlight turned off until the display has stabilized.

5.4 LCD Module Block Diagram

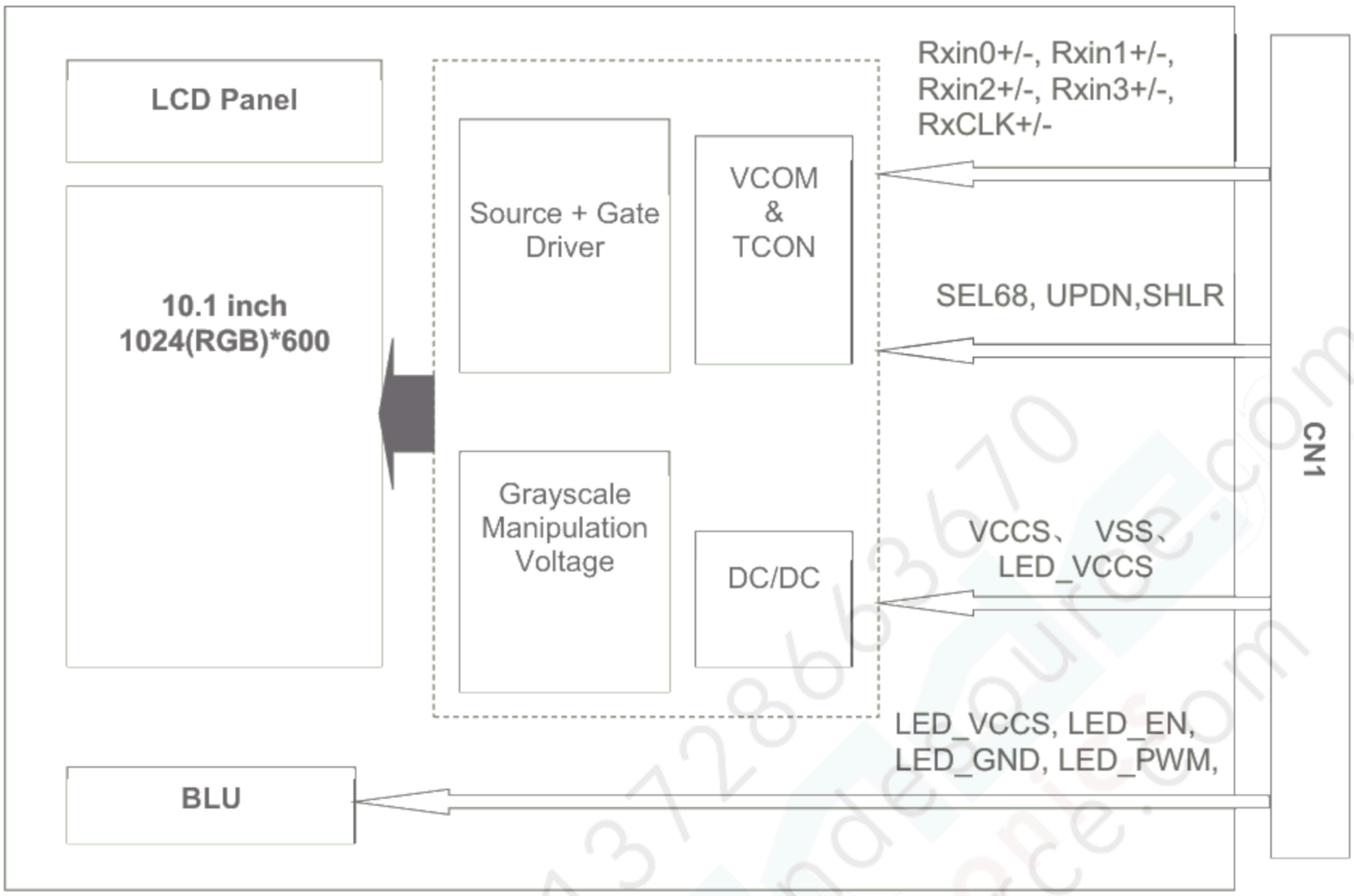

Figure 5.4 LCD Module Block Diagram

6. Interface Timing Characteristics

6.1 Data input timing table

VCC=3.3V, GND=0V, Ta=25℃

	Parameter	Symbol	Min.	Typ.	Max.	Unit	Remark
Dclk frequency(Frame rate=60HZ)		Fclk	40.8	51.2	67.2	MHz	Tclk=1/Fclk
Horizontal section	Horizontal total	TH	1114	1344	1400	Tclk	
	Horizontal blanking	THC	90	320	376	Tclk	
	Valid Data Width	THD	1024			Tclk	
Vertical section	Vertical total	TV	610	635	800	TH	
	Vertical blanking	TVC	10	35	200	TH	
	Valid Data Width	TVD	600			TH	

Table 6.1 Input timing (DE mode)

6.2 Data input timing diagram

i. Vertical Input Timing Diagram

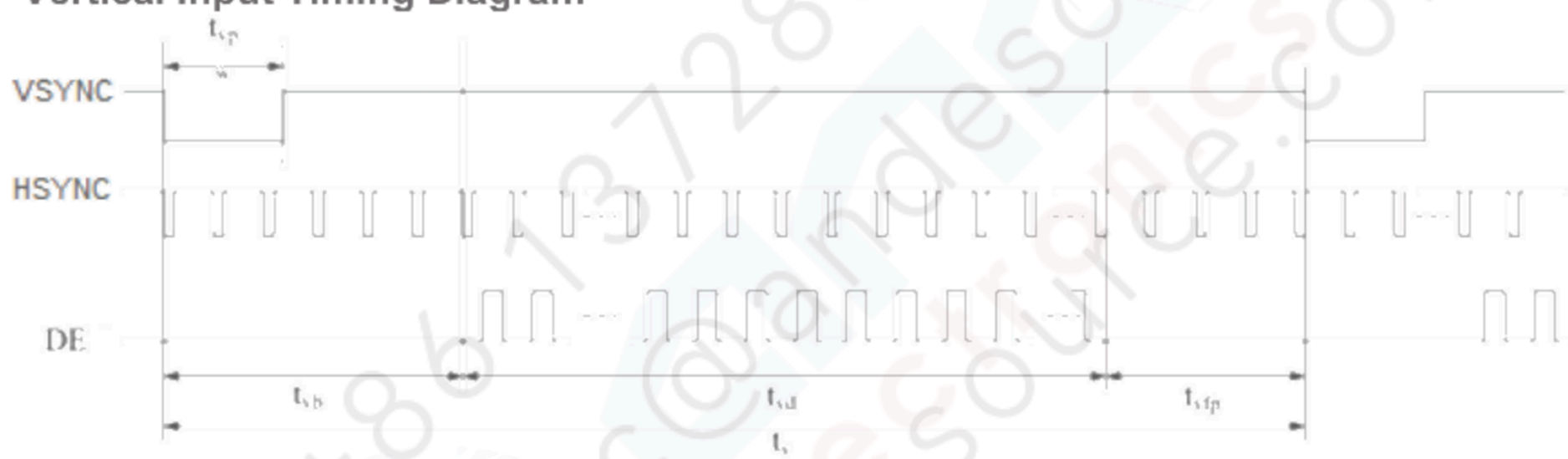

Figure 6.2.1 Vertical Input Timing Diagram

ii. Horizontal Input Timing Diagram

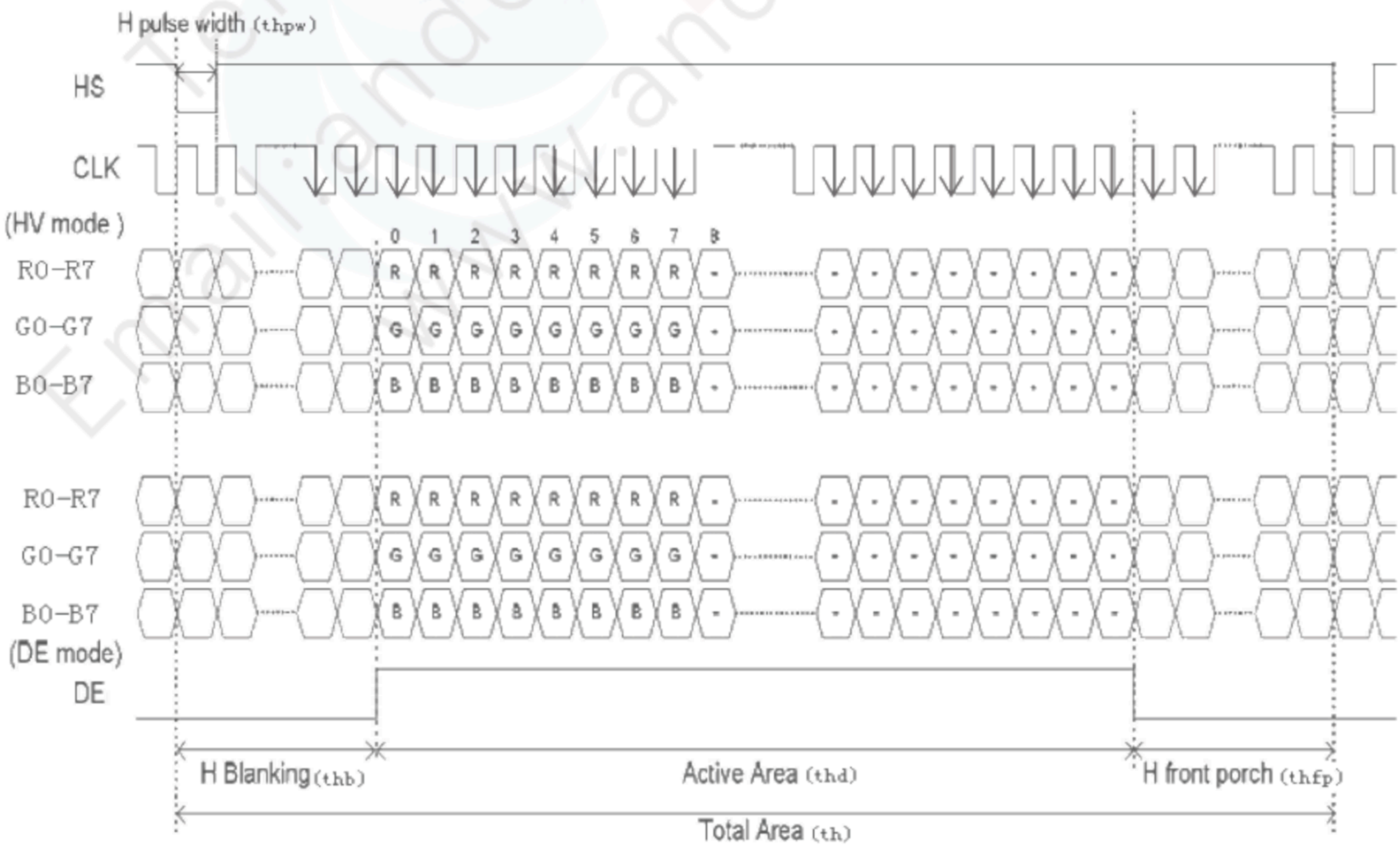

Figure 6.2.2 Vertical Input Timing Diagram

7. Optical Characteristics

Ta=25℃

Item		Symbol	Condition	Min	Typ	Max	Unit	Remark
View Angles		θT	CR≧10	60	75	-	Degree	Note2,3
		θB		70	80	-		
		θL		70	80	-		
		θR		70	80	-		
Contrast Ratio		CR	θ=0°	400	500			Note 3
Response Time		T_{ON}	25℃	-	16	28	ms	Note 4
		T_{OFF}						
Chromaticity	White	x	Backlight is on	0.263	0.313	0.363		Note 1,5
		y		0.279	0.329	0.379		
	Red	x		0.524	0.574	0.624		Note 1,5
		y		0.285	0.335	0.385		
	Green	x		0.280	0.330	0.380		Note 1,5
		y		0.525	0.575	0.625		
	Blue	x		0.108	0.158	0.208		Note 1,5
		y		0.090	0.140	0.190		
Uniformity		U		70	80	-	%	Note 6
NTSC				42	47	-	%	Note 5
Luminance		L		280	350	-	cd/m^2	Note 7

Table 7.1 Optical characteristics

Test Conditions:

1. PWM duty=100%. Ambient temperature is 25℃.
2. The test systems refer to Note 1 and Note 2.

Note 1: Definition of optical measurement system.

The optical characteristics should be measured in dark room. After 5 Minutes operation, the optical properties are measured at the center point of the LCD screen. All input terminals LCD panel must be ground when measuring the center area of the panel.

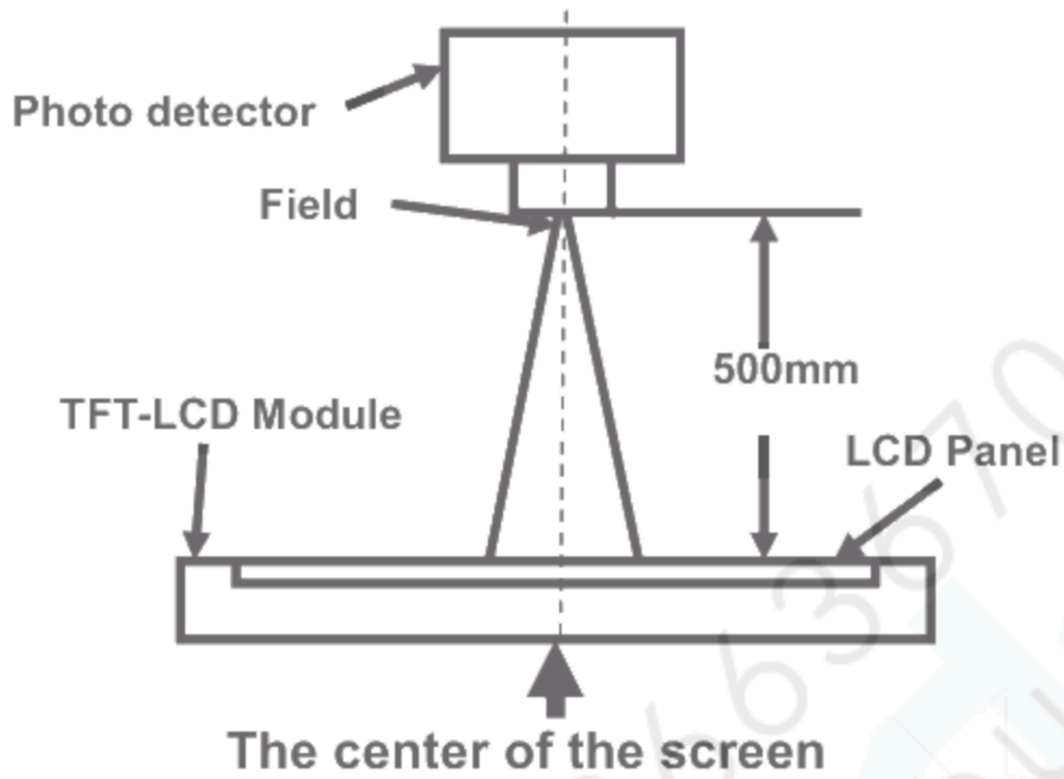

Note 2: Definition of viewing angle range and measurement system.

viewing angle is measured at the center point of the LCD 。

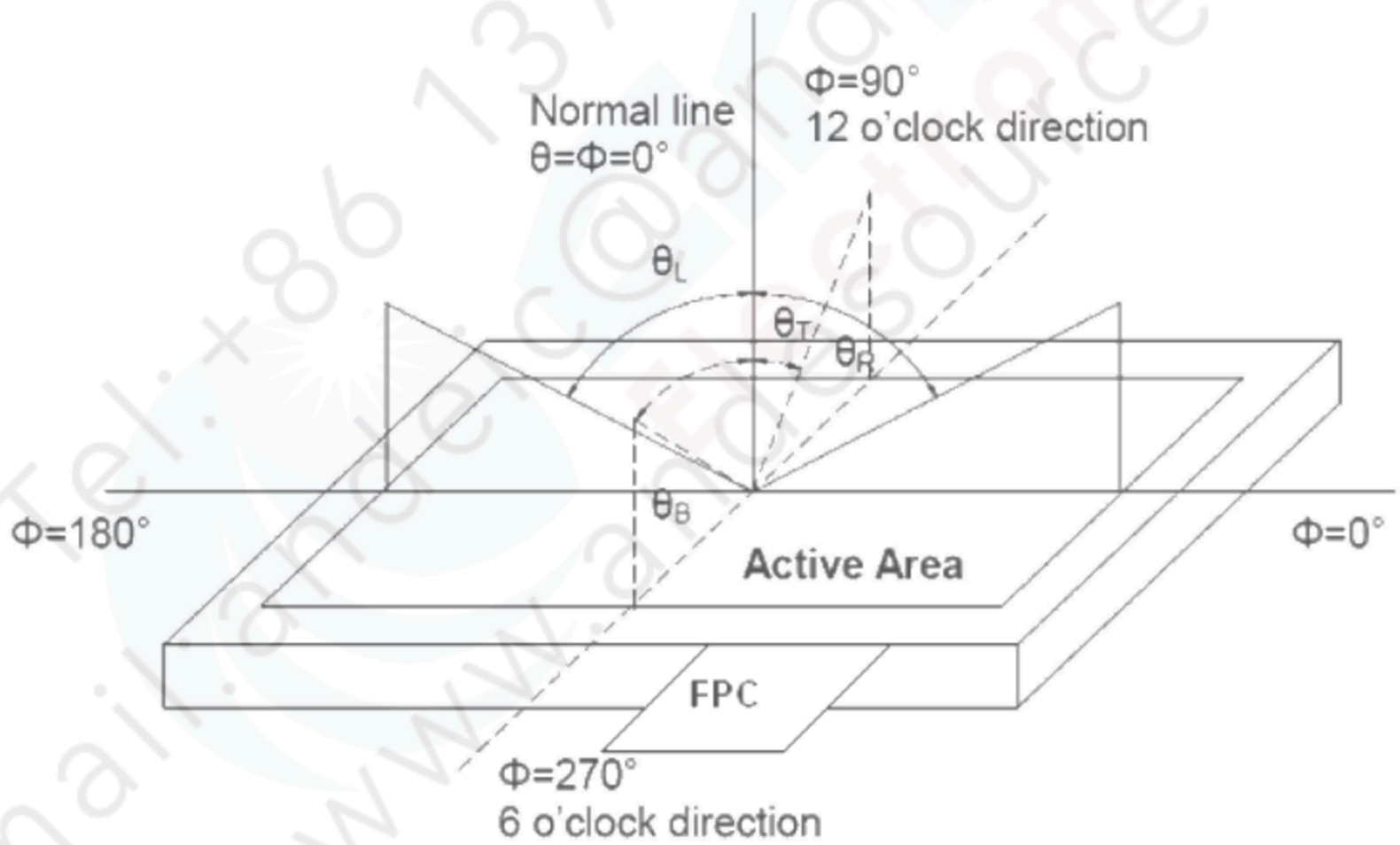

Note 3: Definition of contrast ratio

$$\text{Contrast ratio (CR)} = \frac{\text{Luminance measured when LCD is on the "White" state}}{\text{Luminance measured when LCD is on the "Black" state}}$$

"White state ": The state is that the LCD should drive by Vwhite.

"Black state": The state is that the LCD should drive by Vblack.

Vwhite: To be determined Vblack: To be determined.

Note 4: Definition of Response time

The response time is defined as the LCD optical switching time interval between "White" state and "Black" state. Rise time (T_{ON}) is the time between photo detector output intensity changed from 90% to 10%. And fall time (T_{OFF}) is the time between photo detector output intensity changed from 10% to 90%.

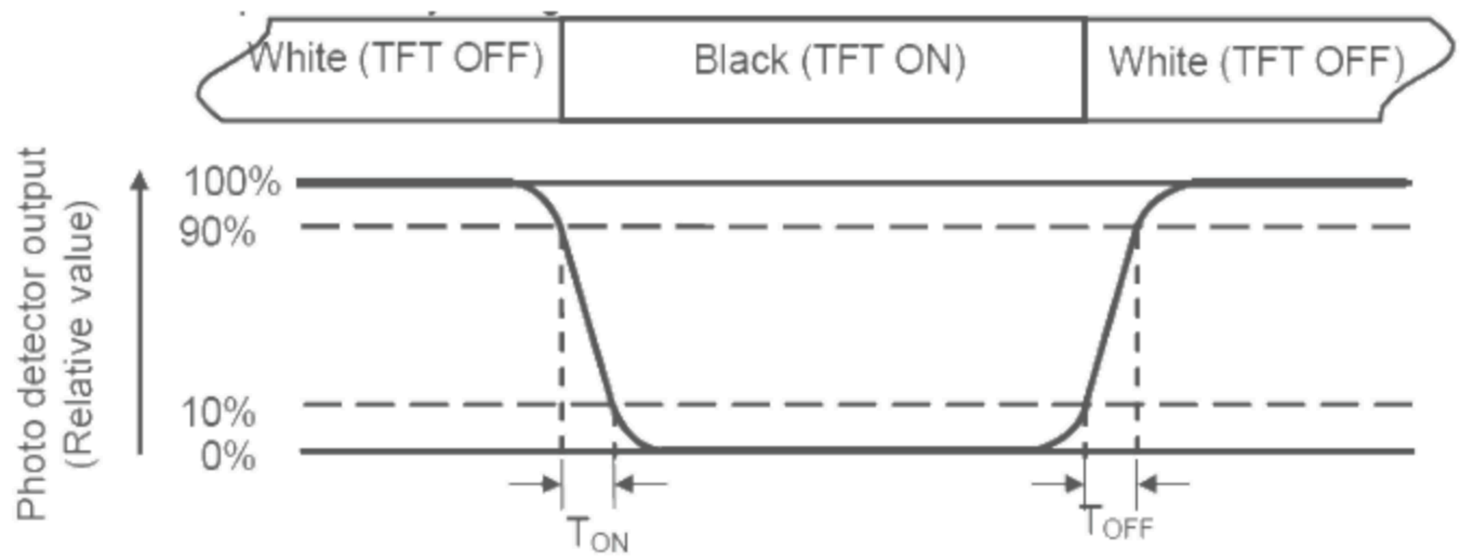

Note 5: Definition of color chromaticity (CIE1931)

Color coordinates measured at center point of LCD.

Note 6: Definition of Luminance Uniformity

Active area is divided into 9 measuring areas (Refer Fig. 2). Every measuring point is placed at the center of each measuring area.

Luminance Uniformity (U) = Lmin/ Lmax

L-------Active area length W----- Active area width

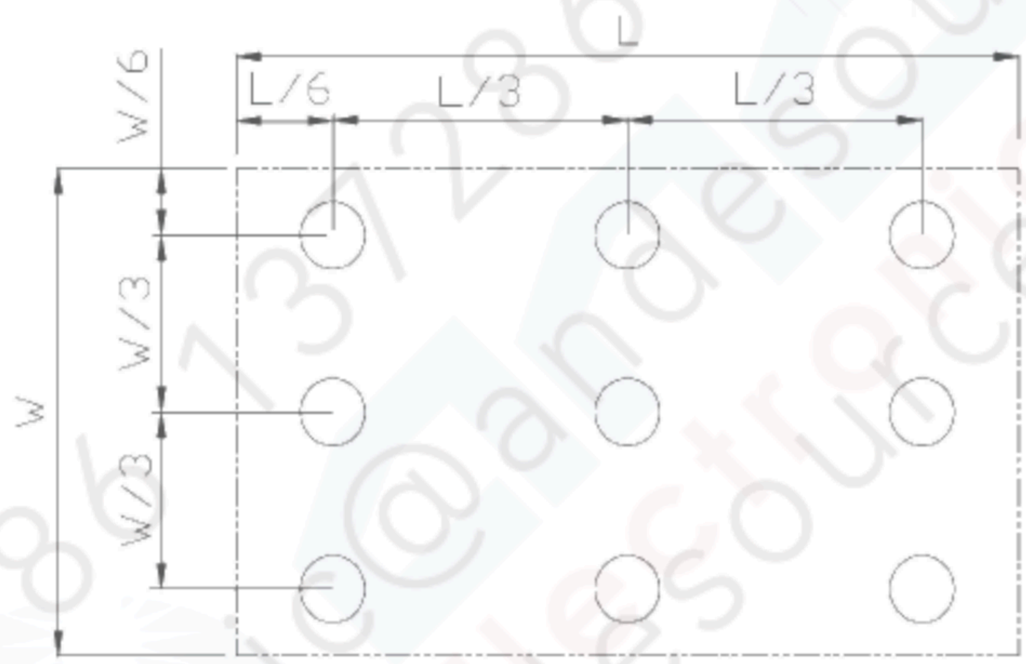

Lmax: The measured Maximum luminance of all measurement position.

Lmin: The measured Minimum luminance of all measurement position.

Note 7: Definition of Luminance:

Measure the luminance of white state at center point.

8. Reliability Test

No	Test Item	Condition	Remarks
1	High Temperature Operation	+70℃,240hrs	IEC60068-2-1:2007 GB2423.2-2008
2	Low Temperature Operation	-20℃,240hrs	IEC60068-2-1:2007 GB2423.1-2008
3	High Temperature Storage	+80℃,240hrs	IEC60068-2-1:2007 GB2423.2-2008
4	Low Temperature Storage	-30℃,240 hrs	IEC60068-2-1:2007 GB2423.1-2008
5	Storage at High Temperature and Humidity	+60℃, 90% RH 240 hours	IEC60068-2-78 :2001 GB/T2423.3—2006
6	Thermal Shock (non-operation)	-30℃ 30 min~+70℃ 30 min, Change time:5min,100 Cycles	Start with cold temperature, End with high temperature, IEC60068-2-14:1984,GB2423.22-2002
7	ESD	C=150pF, R=330Ω,9points/panel Air:± 15KV, 25times, Contact:± 8KV, 25 times,	IEC61000-4-2:2001 GB/T17626.2-2006
8	Vibration Test	Stroke:1.5G Sweep:10Hz~100Hz~10Hz 2 hours for each direction of X.Y.Z. (6 hours for total)	IEC60068-2-6:1982 GB/T2423.10—1995
9	Mechanical Shock (Non OP)	50G 20ms, ± X,± Y,± Z 3times, for each direction	IEC60068-2-27:1987 GB/T2423.5—1995

Table 8.1 Reliability test condition

Note1: Before cosmetic and function test, the product must have enough recovery time, at least 2 hours at room temperature.

Note 2: In the standard condition, there shall be no practical problem that may affect the display function. After the reliability test, the product only guarantees operation, but don't guarantee all of the cosmetic specification.

9. Mechanical Drawing

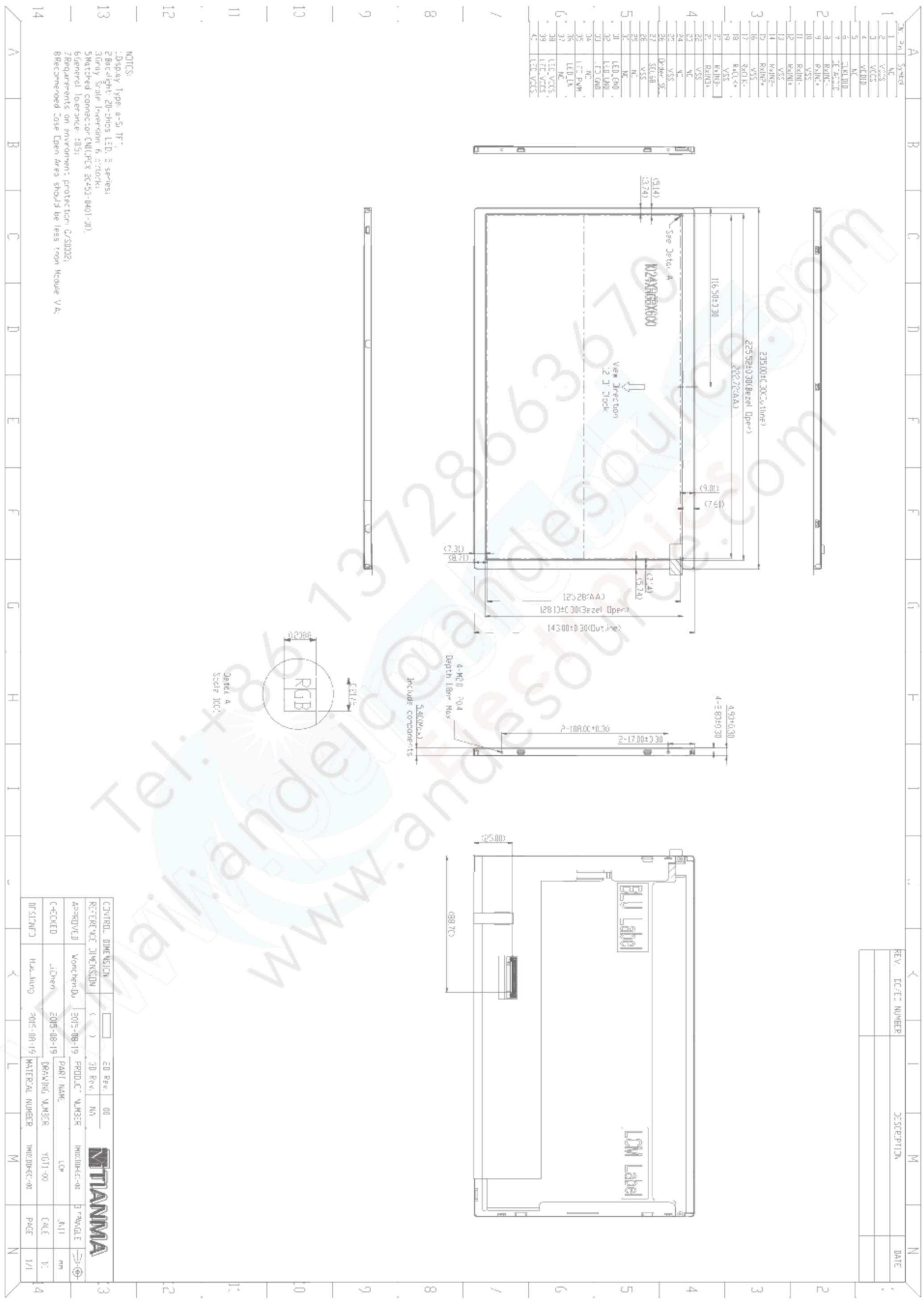

10. Packing Instruction

No	Item	Model(Material)	Dimensions(mm)	Unit Weight(Kg)	Quantity	Remark
1	LCM module	TM101DDHG01-72	235×143×4.9	0.202	20	
2	Partition-1	Corrugated paper	513×333×217	1.42	1	
3	Anti-static Bag	PE	285×245×6	0.011	20	
4	Dust –Proof Bag	PE	700×545	0.05	1	
5	Corrugated Bar	Corrugated paper	409×253×37	0.082	1	
6	Partition-2	Corrugated paper	505×332×7	0.1	1	
7	Carton	Corrugated paper	530×350×250	0.76	1	
8	Total weight	6.65Kg±10%				

Table10.1 Packing instruction

The detail of packaging method is shown as below:

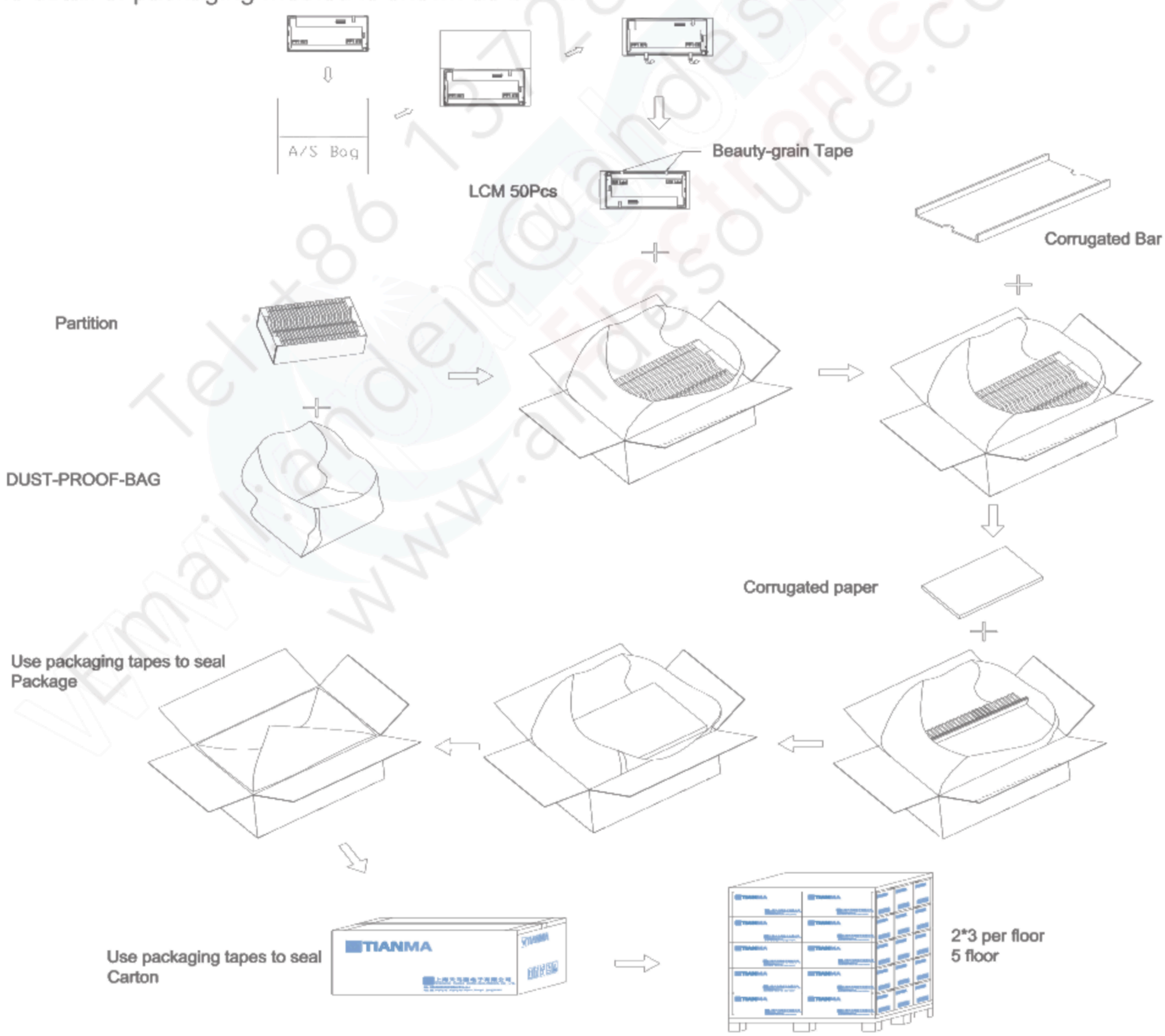

Figure10.1 Packing instruction

11 Precautions for Use of LCD Modules

11.1 Handling Precautions

11.1.1 The display panel is made of glass. Do not subject it to a mechanical shock by dropping it from a high place, etc.

11.1.2 If the display panel is damaged and the liquid crystal substance inside it leaks out, be sure not to get any in your mouth, if the substance comes into contact with your skin or clothes, promptly wash it off using soap and water.

11.1.3 Do not apply excessive force to the display surface or the adjoining areas since this may cause the color tone to vary.

11.1.4 The polarizer covering the display surface of the LCD module is soft and easily scratched. Handle this polarizer carefully.

11.1.5 If the display surface is contaminated, breathe on the surface and gently wipe it with a soft dry cloth. If still not completely clear, moisten cloth with one of the following solvents:

- Isopropyl alcohol
- Ethyl alcohol

Solvents other than those mentioned above may damage the polarizer. Especially, do not use the following:

- Water
- Ketone
- Aromatic solvents

11.1.6 Do not attempt to disassemble the LCD Module.

11.1.7 If the logic circuit power is off, do not apply the input signals.

11.1.8 To prevent destruction of the elements by static electricity, be careful to maintain an optimum work environment.

10.1.8.1 Be sure to ground the body when handling the LCD Modules.

10.1.8.2 Tools required for assembly, such as soldering irons, must be properly ground.

10.1.8.3 To reduce the amount of static electricity generated, do not conduct assembly and other work under dry conditions.

10.1.8.4 The LCD Module is coated with a film to protect the display surface. Be care when peeling off this protective film since static electricity may be generated.

11.2 Storage precautions

11.2.6 When storing the LCD modules, avoid exposure to direct sunlight or to the light of fluorescent lamps.

11.2.7 The LCD modules should be stored under the storage temperature range. If the LCD modules will be stored for a long time, the recommend condition is:

Temperature : 0℃ ～ 40℃ Relatively humidity: ≤80%

11.2.8 The LCD modules should be stored in the room without acid, alkali and harmful gas.

11.3 Transportation Precautions

11.3.6 The LCD modules should be no falling and violent shocking during transportation, and also should avoid excessive press, water, damp and sunshine.

11.4 Do not display the fixed pattern for a long time because it may cause image sticking. Use a screen saver, if the fixed pattern is displayed on the screen

11.5 SAFETY PRECAUTIONS

a. When you waste damaged or unnecessary LCDs, it is recommended to crush LCDs into pieces a nd wash them off with solvents such as acetone and ethanol, which should later be burned.

b. If any liquid leaks out of a damaged glass cell and comes in contact with the hands, wash off thor oughly with soap and water.

c. Be sure to turn off the power supply when inserting or disconnecting the LED backlight cable.

d. LED driver should be designed carefully to limit or stop its function when over current is detected on the LED.

11.6 screen saver

Not display the fixed pattern for a long time because it may cause image sticking. Use a screen saver, if the fixed pattern is displayed on the screen